MOLTO LUCE®

TUNE

157-0116050114442

TUNE S PC EXTENSION HIGH-BAY REFLECTOR LUMINAIRE made of aluminium, silver, similar to RAL 9006,high quality plastic lens beam 75°, accessoire: PC, light output direct, UGR <25, with converter, max. 1900mA, dimmability: DALI 2, motion swarm, IP55 incl. power supply for sensor standalone versions

DRAWING

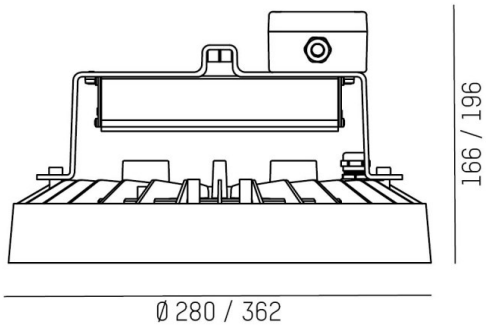

TECHNICAL DETAILS

System perform. [W]	85
Bulb type	LED
Luminous flux [lm]	12860
Current sec. [mA]	1900
Colour temp. [K]	4000K
CRI	>80
UGR	<25
Optics	high quality plastic lens
Converter	with converter
Dimming	DALI 2, motion swarm
Light output	direct
Beam angle [°]	75°
Voltage [V]	220-240V 50/60Hz
Material	aluminium
Length [mm]	280
Height [mm]	176
Diameter [mm]	280
IP protection class	IP55
Voltage class	protection cl. I
Shock resistance	IK10
Net weight [kg]	3,38
Colour lamp	silver
RAL	9006
EAN-Number	9010506916478
Lifetime [h]	70 000 L80 B10
Ambient temperature	-30° bis +50°
Energy efficiency cl.	D
No. of luminaires B16A	7
IFS suitable	Yes

LIGHT DISTRIBUTION CURVE

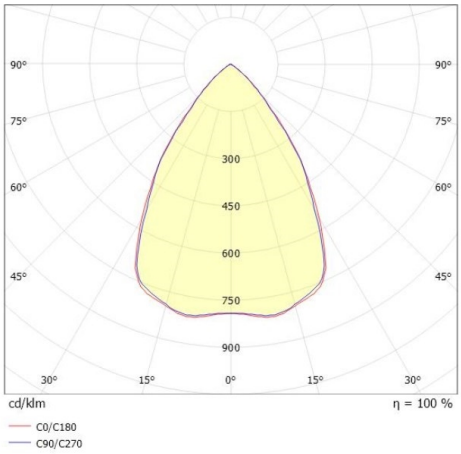

The values are rated values. Power and luminous flux are initially subject to a tolerance of +/- 10%. Colour temperature tolerance: +/- 150 K. The values apply to an ambient temperature of 25°C unless otherwise specified.