MOLTO LUCE®

NOA SYSTEM

208-19137503

adapter, GAC 69-3

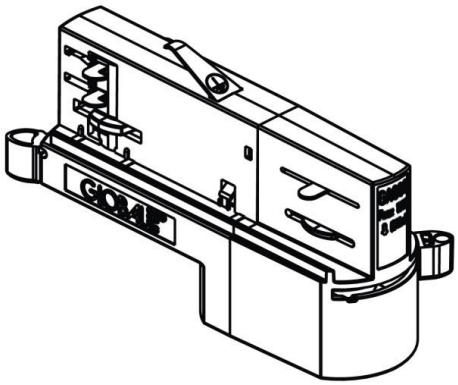

DRAWING

TECHNICAL DETAILS

Voltage [V]	220-240V 50/60HZ
Material	synthetic
Length [mm]	105
Width [mm]	30
Height [mm]	40
IP protection class	IP20
Voltage class	protection cl. I
Net weight [kg]	0,06
Colour lamp	white
RAL	9016

LIGHT DISTRIBUTION CURVE

CE

The values are rated values. Power and luminous flux are initially subject to a tolerance of +/- 10%. Colour temperature tolerance: +/- 150 K. The values apply to an ambient temperature of 25°C unless otherwise specified.