MOLTO LUCE®

NOA SYSTEM

208-19180116

bracket for mounting a 3-Circuit Track on a grid ceiling

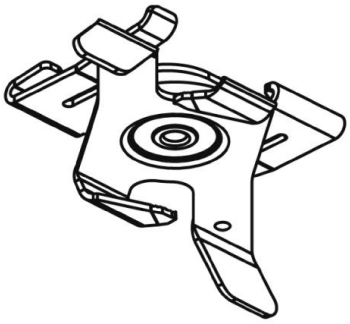

DRAWING

TECHNICAL DETAILS

Dimming	not dimmable
Material	metal
IP protection class	IP20
Net weight [kg]	0,02
Colour lamp	white
RAL	9016
EAN-Number	6410014500627

LIGHT DISTRIBUTION CURVE

CE

The values are rated values. Power and luminous flux are initially subject to a tolerance of +/- 10%. Colour temperature tolerance: +/- 150 K. The values apply to an ambient temperature of 25°C unless otherwise specified.