MOLTO LUCE®

MAGIS

222-00041

MAGIS MINI SD WALL / CEILING LUMINAIRE made of aluminium, white, similar to RAL 9003,high-efficiently vacuum deposited synthetic reflector beam 46°, light output direct, UGR <19, swiveling 350°, tilting 90°, with converter, max. 500mA, dimmability: DALI 2, IP20

DRAWING

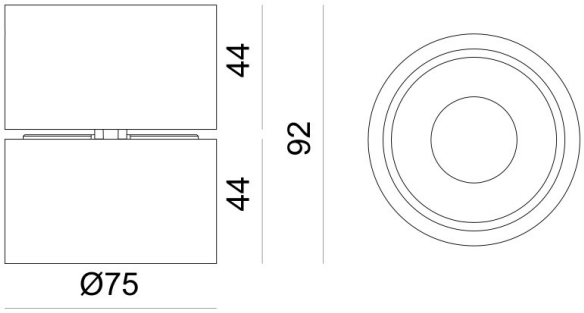

TECHNICAL DETAILS

System perform. [W]	12
Bulb type	LED
Luminous flux [lm]	800
Current sec. [mA]	500
Colour temp. [K]	3000K
CRI	>90
UGR	<19
Optics	vacuum deposited synthetic reflector
Converter	with converter
Light output	direct
Beam angle [°]	46°
Voltage [V]	220-240V 50Hz
Material	aluminium
Height [mm]	92
Diameter [mm]	75
IP protection class	IP20
Voltage class	protection cl. I
Shock resistance	IK02
Net weight [kg]	0,47
Colour lamp	white
RAL	9003
EAN-Number	9010870166318
Energy efficiency cl.	E
No. of luminaires B16A	49

LIGHT DISTRIBUTION CURVE

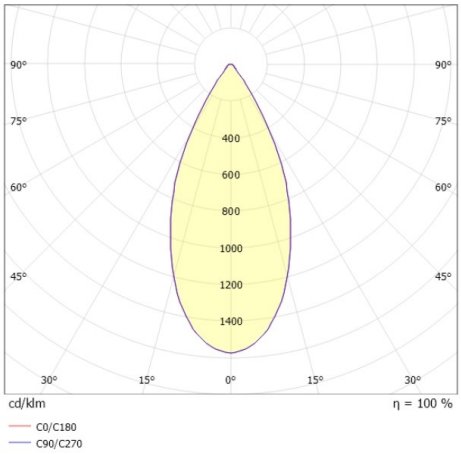

CE

The values are rated values. Power and luminous flux are initially subject to a tolerance of +/- 10%. Colour temperature tolerance: +/- 150 K. The values apply to an ambient temperature of 25°C unless otherwise specified.