STEUERUNG

28-301093

DIMMEN DALI - DALI REPEATER SO

alle DALI EVGs, für max. 64 EVGs, nur 1-Phasen Betrieb möglich

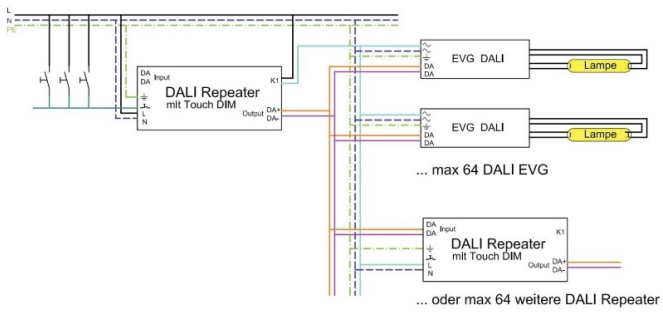

DRAWING

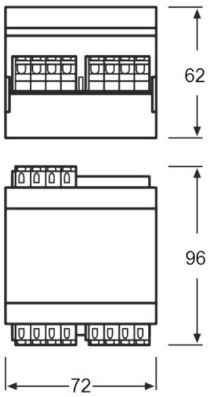

TECHNICAL DETAILS

System perform. [W]	5
Converter	with converter
Voltage [V]	220-240V 50/60Hz
Material	synthetic
Length [mm]	72
Width [mm]	96
Height [mm]	62
IP protection class	IP20
Voltage class	protection cl. I
Net weight [kg]	0,15
EAN-Number	4008321301093

LIGHT DISTRIBUTION CURVE

CE

The values are rated values. Power and luminous flux are initially subject to a tolerance of +/- 10%. Colour temperature tolerance: +/- 150 K. The values apply to an ambient temperature of 25°C unless otherwise specified.