MOLTO LUCE®

AEON

305-602427w

AEON SQUARE SURFACE MOUNTED CEILING LUMINAIRE made of aluminium, white, similar to RAL 9003, beam 45°, light output direct, with converter, dimmability: not dimmable, IP20

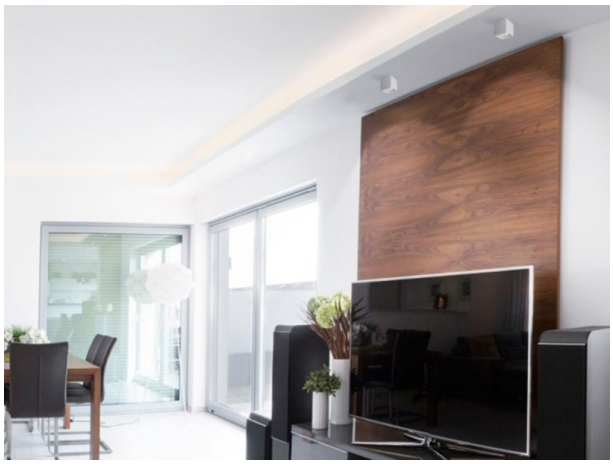

DRAWING

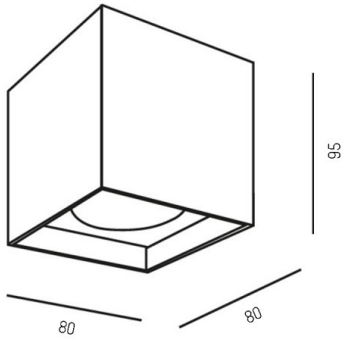

TECHNICAL DETAILS

System perform. [W]	6
Bulb type	LED
Luminous flux [lm]	430
Colour temp. [K]	2700K
CRI	>80
Converter	with converter
Dimming	not dimmable
Light output	direct
Beam angle [°]	45°
Voltage [V]	220-240V 50/60Hz
Material	aluminium
Length [mm]	80
Width [mm]	80
Height [mm]	95
IP protection class	IP20
Voltage class	protection cl. I
Net weight [kg]	0,43
Colour lamp	white
RAL	9003
EAN-Number	9008905932519
Lifetime [h]	L80 B10 20 000
Energy efficiency cl.	F

LIGHT DISTRIBUTION CURVE

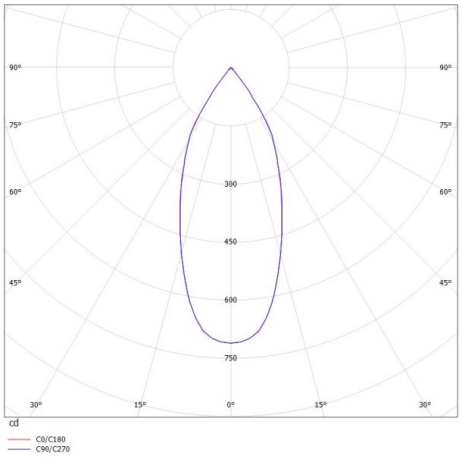

CE

The values are rated values. Power and luminous flux are initially subject to a tolerance of +/- 10%. Colour temperature tolerance: +/- 150 K. The values apply to an ambient temperature of 25°C unless otherwise specified.