PONTOS

305-621536w40k

PONTOS SQUARE RECESSED SPOTLIGHT made of aluminium, white matt, similar to RAL 9003, beam 36°, light output direct, tilting 30°, without converter, max. 250mA, dimmability: see converter, IP44

DRAWING

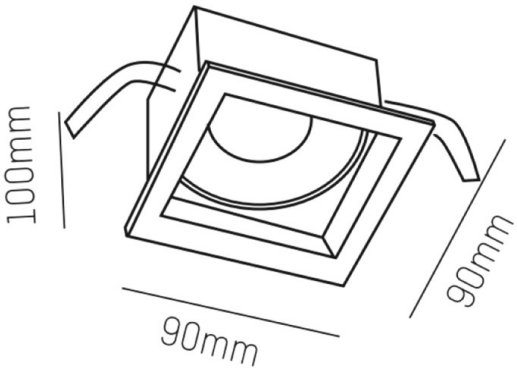

LIGHT DISTRIBUTION CURVE

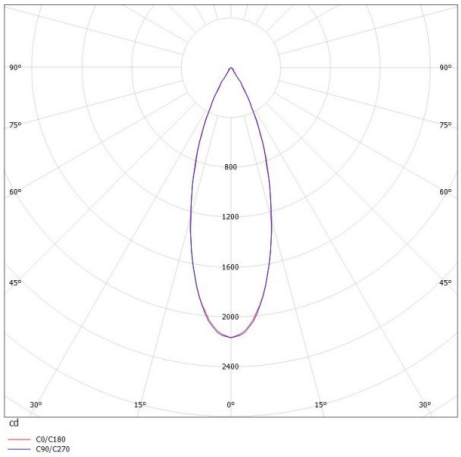

TECHNICAL DETAILS

Bulb type	LED 10W
Luminous flux [lm]	870
Current sec. [mA]	250
Colour temp. [K]	4000K
CRI	>80
Converter	without converter
Dimming	see converter
Light output	direct
Beam angle [°]	36°
Voltage [V]	40 VDC
Material	aluminium
Length [mm]	90
Width [mm]	90
Height [mm]	80
Ceiling cutout [mm]	83x83
Recess depth [mm]	110
IP protection class	IP44
Voltage class	protection cl. III
Net weight [kg]	0,25
Colour lamp	white matt
RAL	9003
EAN-Number	9010506045420
Lifetime [h]	L80 B10 20 000

CE

The values are rated values. Power and luminous flux are initially subject to a tolerance of +/- 10%. Colour temperature tolerance: +/- 150 K. The values apply to an ambient temperature of 25°C unless otherwise specified.