KALIO SQUARE

308-30033500

KALIO SQUARE R RECESSED SPOTLIGHT made of aluminium, white, similar to RAL 9003, beam 38°, light output direct, tilting 45°, without converter, max. 250mA, dimmability: see converter, IP20

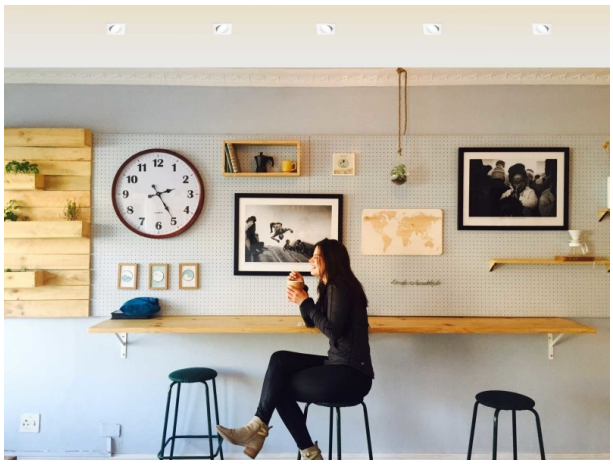

DRAWING

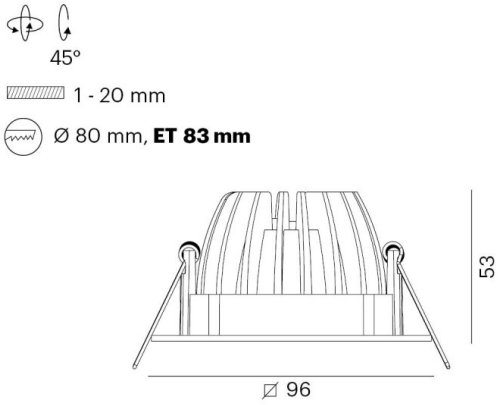

TECHNICAL DETAILS

System perform. [W]	9
Bulb type	LED 9W
Luminous flux [lm]	860
Current sec. [mA]	250
Colour temp. [K]	2700K
CRI	>90
Converter	without converter
Dimming	see converter
Light output	direct
Beam angle [°]	38°
Voltage [V]	36 VDC
Material	aluminium
Length [mm]	96
Width [mm]	96
Height [mm]	53
Ceiling cutout [mm]	80
Ceiling thickness [mm]	1-20
Recess depth [mm]	83
IP protection class	IP20
Voltage class	protection cl. III
Net weight [kg]	0,17
Colour lamp	white
RAL	9003
EAN-Number	9010506139990
Lifetime [h]	L80 B10 20 000
Energy efficiency cl.	E

LIGHT DISTRIBUTION CURVE

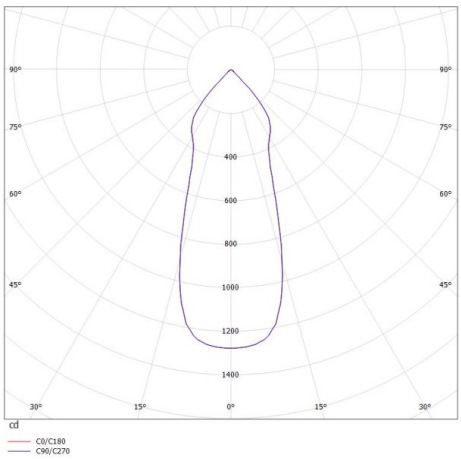

CE

The values are rated values. Power and luminous flux are initially subject to a tolerance of +/- 10%. Colour temperature tolerance: +/- 150 K. The values apply to an ambient temperature of 25°C unless otherwise specified.