CADAN NOVA L PD

445-771501416d

CADAN NOVA L PD SUSPENSION made of aluminium, black, similar to RAL 9005,satined PMMA opal diffuser light output direct, with converter, dimmability: DALI, cable transparent, adapter/ceiling base black, pendant length max. 1500mm, IP20

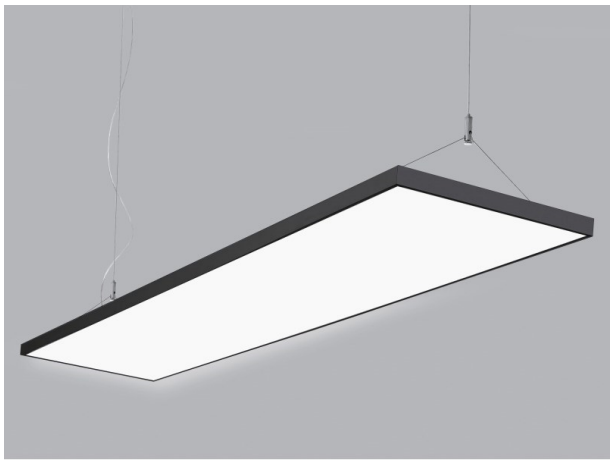

DRAWING

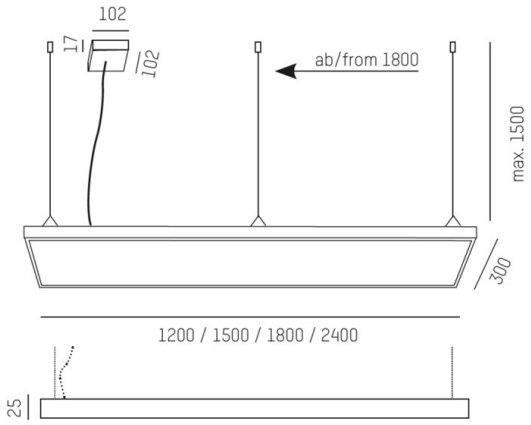

LIGHT DISTRIBUTION CURVE

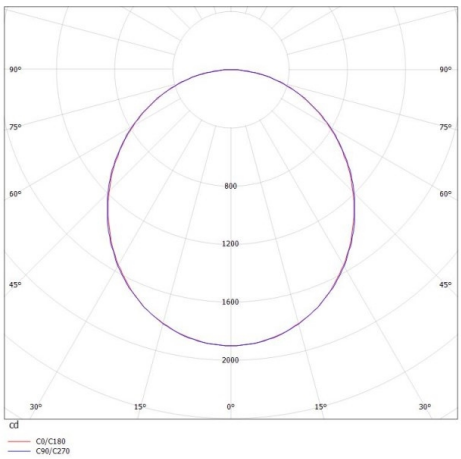

TECHNICAL DETAILS

System perform. [W]	41
Bulb type	LED
Luminous flux [lm]	5260
Colour temp. [K]	4000K
CRI	>80
Optics	PMMA opal diffuser
Converter	with converter
Light output	direct
Voltage [V]	220-240V 50/60Hz
Material	aluminium
Length [mm]	1500
Width [mm]	300
Height [mm]	25
Pendant length [mm]	max. 1500
IP protection class	IP20
Voltage class	protection cl. I
Shock resistance	IK02
Net weight [kg]	8,00
Colour lamp	black
RAL	9005
Colour adapter/ceiling base	black
Electric wire	transparent
EAN-Number	9008905881046
Lifetime [h]	L85 B10 50 000
No. of luminaires B16A	24

CE

The values are rated values. Power and luminous flux are initially subject to a tolerance of +/- 10%. Colour temperature tolerance: +/- 150 K. The values apply to an ambient temperature of 25°C unless otherwise specified.