CADAN NOVA SYSTEM PDI

445-791511415d

CADAN NOVA SYSTEM PDI SYSTEM LUMINAIRE made of aluminium, white, similar to RAL 9003,satined PMMA opal diffuser light output direct / indirect, with converter, dimmability: DALI, adapter/ceiling base white, pendant length max. 1500mm, IP20

DRAWING

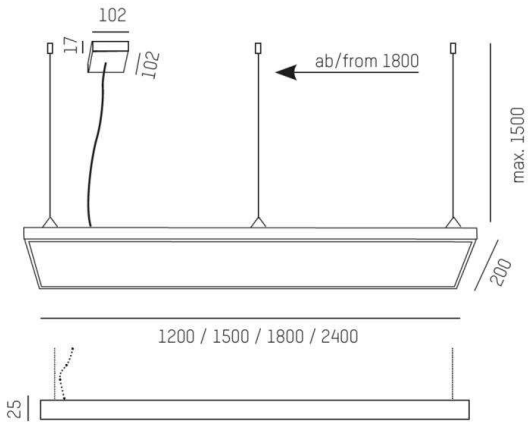

LIGHT DISTRIBUTION CURVE

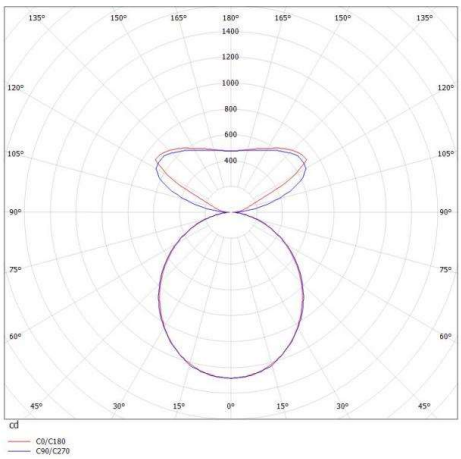

TECHNICAL DETAILS

System perform. [W]	53
Bulb type	LED
Luminous flux [lm]	6110
Colour temp. [K]	4000K
CRI	>80
Optics	PMMA opal diffuser
Converter	with converter
Light output	direct / indirect
Voltage [V]	220-240V 50/60Hz
Material	aluminium
Length [mm]	1500
Width [mm]	200
Height [mm]	25
Pendant length [mm]	max. 1500
IP protection class	IP20
Voltage class	protection cl. I
Shock resistance	IK02
Net weight [kg]	5,70
Color lamp	white
RAL	9003
Color adapter/ceiling base	white
EAN-Number	9010506306552
Lifetime [h]	L85 B10 50 000

CE

The values are rated values. Power and luminous flux are initially subject to a tolerance of +/- 10%. Colour temperature tolerance: +/- 150 K. The values apply to an ambient temperature of 25°C unless otherwise specified.