GEMO M II

456-216000100034

GEMO M II TABLE LUMINAIRE made of steel, black,satined glass light output direct, with converter, dimmability: not dimmable, IP20

DRAWING

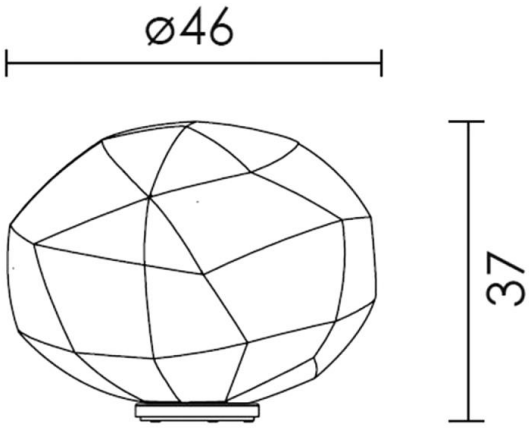

TECHNICAL DETAILS

Bulb type	LED 15W
Socket	E27
Colour temp. [K]	2700K
Optics	satined glass
Converter	with converter
Dimming	not dimmable
Light output	direct
Voltage [V]	220-240V 50/60Hz
Material	steel
Height [mm]	370
Diameter [mm]	460
IP protection class	IP20
Voltage class	protection cl. II
Net weight [kg]	7,80
Colour lamp	black

LIGHT DISTRIBUTION CURVE

CE

The values are rated values. Power and luminous flux are initially subject to a tolerance of +/- 10%. Colour temperature tolerance: +/- 150 K. The values apply to an ambient temperature of 25°C unless otherwise specified.