MOLTO LUCE®

## LITIN 2.0

## 540-0111013055050

LITIN 2 SD SURFACE MOUNTED SPOTLIGHT made of aluminium, white, similar to RAL 9016, decor white,satined PMMA opal diffuser beam 105°, light output direct, swiveling 350°, tilting 90°, dimmability: not dimmable, adapter/ceiling base white, IP20

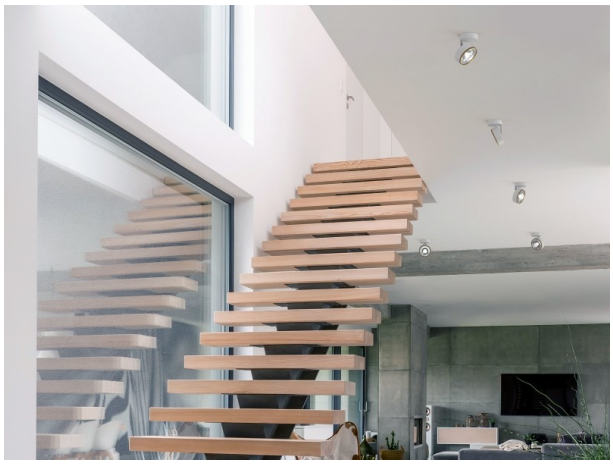

### DRAWING

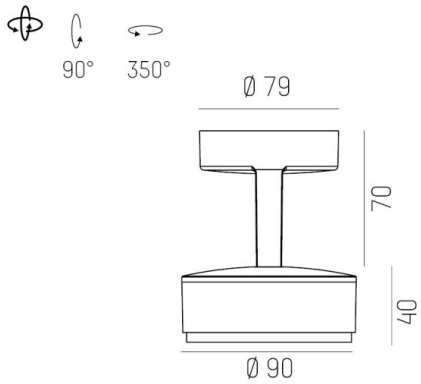


### LIGHT DISTRIBUTION CURVE

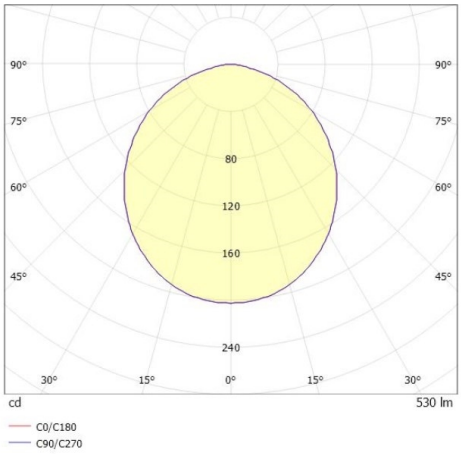


### TECHNICAL DETAILS

| | |
|---|---|
| System perform. [W] | 10 |
| Bulb type | LED |
| Luminous flux [lm] | 530 |
| Colour temp. [K] | 2700K |
| CRI | >90 |
| Optics | PMMA opal diffuser |
| Designer | INHOUSE |
| Dimming | not dimmable |
| Light output | direct |
| Beam angle [°] | 105° |
| Voltage [V] | 220-240V 50/60Hz |
| Material | aluminium |
| | |
| Length [mm] | 121,1 |
| Height [mm] | 110 |
| Diameter [mm] | 90 |
| IP protection class | IP20 |
| Voltage class | protection cl. II |
| Net weight [kg] | 0,89 |
| | |
| Colour lamp | white |
| RAL | 9016 |
| Colour adapter/ceiling base | white |
| Colour decor | white |
| EAN-Number | 9010506822137 |
| Lifetime [h] | 30 000 |
| Energy efficiency cl. | G |

CE

The values are rated values. Power and luminous flux are initially subject to a tolerance of +/- 10%. Colour temperature tolerance: +/- 150 K. The values apply to an ambient temperature of 25°C unless otherwise specified.