LITIN 2.0

540-01122131d5050

LITIN 2 SD SURFACE MOUNTED SPOTLIGHT made of aluminium, white, similar to RAL 9016, decor gold,high quality plastic lens beam 24°, light output direct, swiveling 350°, tilting 90°, dimmability: not dimmable, adapter/ceiling base white, IP20

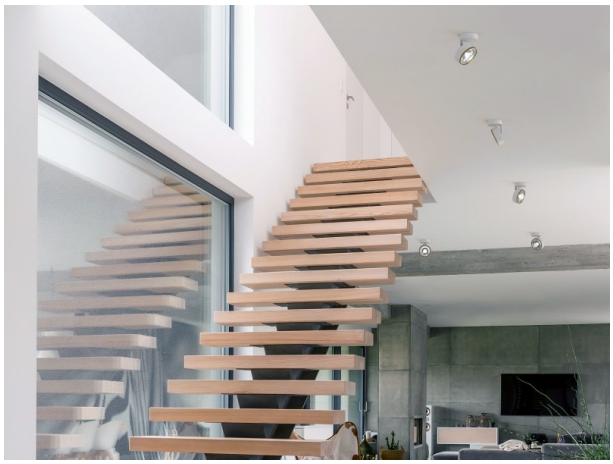

DRAWING

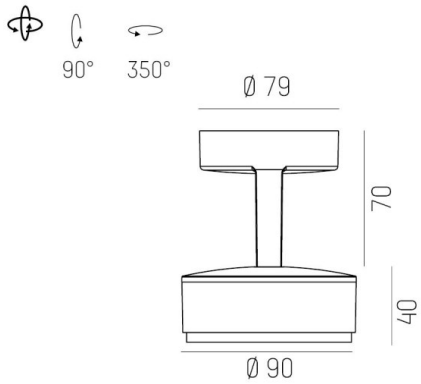

TECHNICAL DETAILS

System perform. [W]	10
Bulb type	LED
Luminous flux [lm]	740
Colour temp. [K]	2700K
CRI	>90
Optics	high quality plastic lens
Designer	INHOUSE
Dimming	not dimmable
Light output	direct
Beam angle [°]	24°
Voltage [V]	220-240V 50/60Hz
Material	aluminium
Length [mm]	121,1
Height [mm]	110
Diameter [mm]	90
IP protection class	IP20
Voltage class	protection cl. II
Net weight [kg]	1,27
Colour lamp	white
RAL	9016
Colour adapter/ceiling base	white
Colour decor	gold
EAN-Number	9010506826234
Lifetime [h]	30 000
Energy efficiency cl.	G

LIGHT DISTRIBUTION CURVE

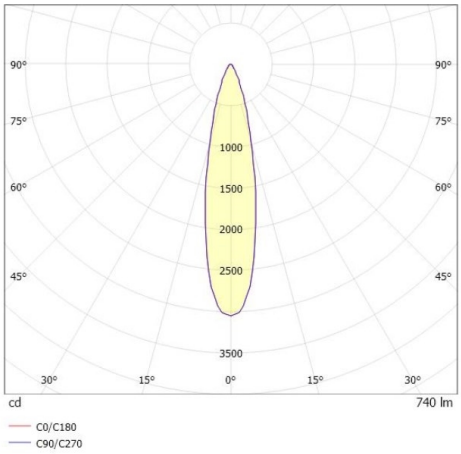

The values are rated values. Power and luminous flux are initially subject to a tolerance of +/- 10%. Colour temperature tolerance: +/- 150 K. The values apply to an ambient temperature of 25°C unless otherwise specified.