RIDE SPOT 1

577-006010129050

RIDE SPOT 1 R RECESSED SPOTLIGHT made of die-cast aluminium, white, similar to RAL 9016,high quality glass lens beam 12°, light output direct, swiveling 350°, tilting 35°, with converter, dimmability: not dimmable, IP20

DRAWING

48 mm, ET 110mm

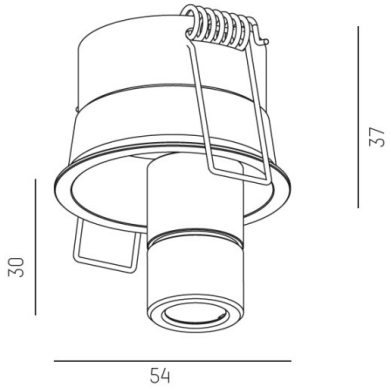

LIGHT DISTRIBUTION CURVE

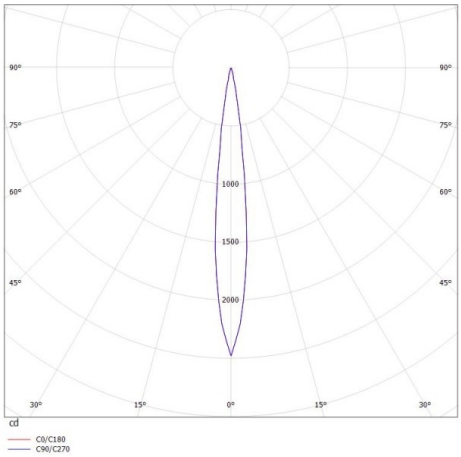

TECHNICAL DETAILS

System perform. [W]	4
Bulb type	LED
Luminous flux [lm]	150
Colour temp. [K]	3000K
CRI	>90
Optics	high quality glass lens
Designer	INHOUSE
Converter	with converter
Dimming	not dimmable
Light output	direct
Beam angle [°]	12°
Voltage [V]	220-240V 50/60Hz
Material	die-cast aluminium
Length [mm]	54
Height [mm]	66
Diameter [mm]	54
Ceiling cutout [mm]	48
Ceiling thickness [mm]	1-20mm
Recess depth [mm]	110
IP protection class	IP20
Voltage class	protection cl. I
Net weight [kg]	0,71
Colour lamp	white
RAL	9016
EAN-Number	9008905677496
Lifetime [h]	L80 B10 50 000
Energy efficiency cl.	G
No. of luminaires B16A	17

CE

The values are rated values. Power and luminous flux are initially subject to a tolerance of +/- 10%. Colour temperature tolerance: +/- 150 K. The values apply to an ambient temperature of 25°C unless otherwise specified.