MOLTO LUCE®

RIDE

577-008022029080

RIDE BLIND SI WALL / CEILING LUMINAIRE made of die-cast aluminium, natural anodised, light output indirect, with converter, dimmability: not dimmable, through wiring 3x0,75mm², IP20

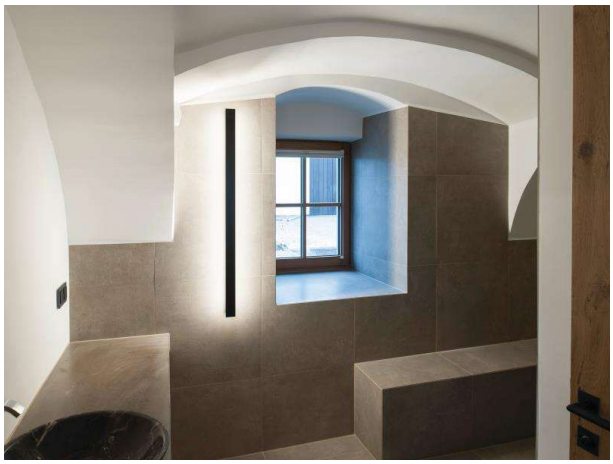

DRAWING

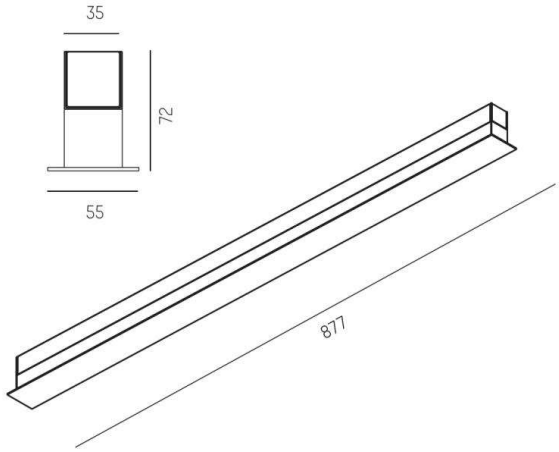

LIGHT DISTRIBUTION CURVE

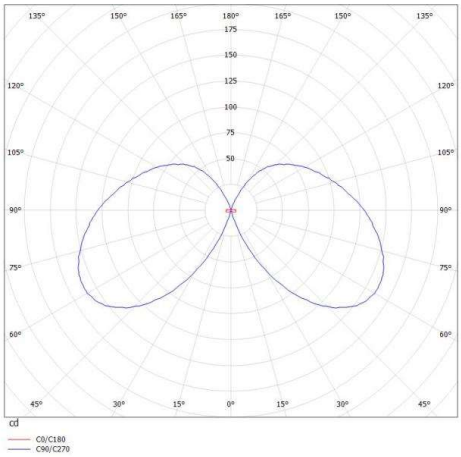

TECHNICAL DETAILS

System perform. [W]	15
Bulb type	LED
Luminous flux [lm]	750
Colour temp. [K]	3000K
CRI	>90
Converter	with converter
Dimming	not dimmable
Light output	indirect
Voltage [V]	220-240V 50/60Hz
Through wiring	3x0,75mm²
Material	die-cast aluminium
Width [mm]	55
Height [mm]	72
IP protection class	IP20
Voltage class	protection cl. I
Shock resistance	IK03
Net weight [kg]	1,87
Colour lamp	natural anodised
EAN-Number	9008905690754
Lifetime [h]	L80 B10 50 000
Energy efficiency cl.	E
No. of luminaires B16A	50

CE

The values are rated values. Power and luminous flux are initially subject to a tolerance of +/- 10%. Colour temperature tolerance: +/- 150 K. The values apply to an ambient temperature of 25°C unless otherwise specified.