RIDE

577-011061023050

RIDE R RECESSED WALL / CEILING LUMINAIRE made of die-cast aluminium, white, similar to RAL 9016,satined PMMA diffuser for homogeneous illumination light output direct, with converter, max. 500mA, dimmability: not dimmable, through wiring 3x0,75mm², IP20

DRAWING

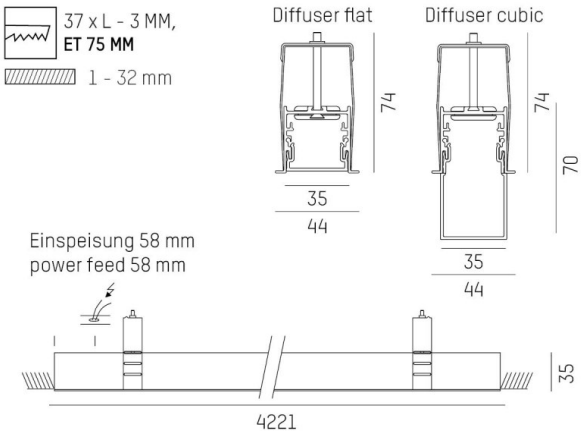

LIGHT DISTRIBUTION CURVE

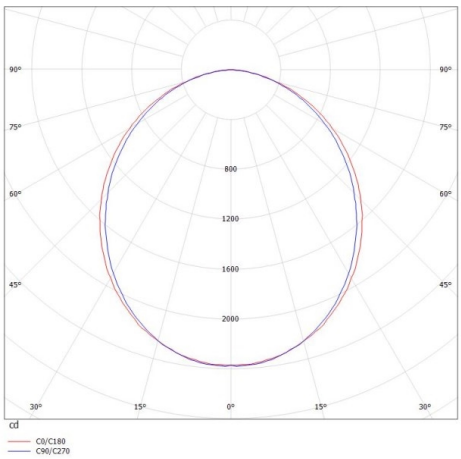

TECHNICAL DETAILS

System perform. [W]	71
Bulb type	LED
Luminous flux [lm]	6190
Current sec. [mA]	500
Colour temp. [K]	2700K
CRI	>90
Optics	PMMA opal diffuser flat
Designer	INHOUSE
Converter	with converter
Dimming	not dimmable
Light output	direct
Voltage [V]	220-240V 50/60Hz
Through wiring	3x0,75mm²
Material	die-cast aluminium
Length [mm]	4221,4
Width [mm]	44
Height [mm]	35
Ceiling cutout [mm]	37mm x L-3mm
Ceiling thickness [mm]	1-32mm
Recess depth [mm]	75
IP protection class	IP20
Voltage class	protection cl. I
Shock resistance	IK03
Net weight [kg]	9,08
Colour lamp	white
RAL	9016
EAN-Number	9008905695100
Lifetime [h]	L80 B10 50 000
Energy efficiency cl.	E
No. of luminaires B16A	16

CE

The values are rated values. Power and luminous flux are initially subject to a tolerance of +/- 10%. Colour temperature tolerance: +/- 150 K. The values apply to an ambient temperature of 25°C unless otherwise specified.