DARK NIGHT LENS

579-00104082306

DARK NIGHT LENS 2 R RECESSED SPOTLIGHT made of aluminium, black matt, similar to RAL 9005, decor gold,high-efficiently vacuum deposited aluminium reflector beam 36°, light output direct, UGR <16, without converter, max. 700mA, dimmability: see converter, IP20

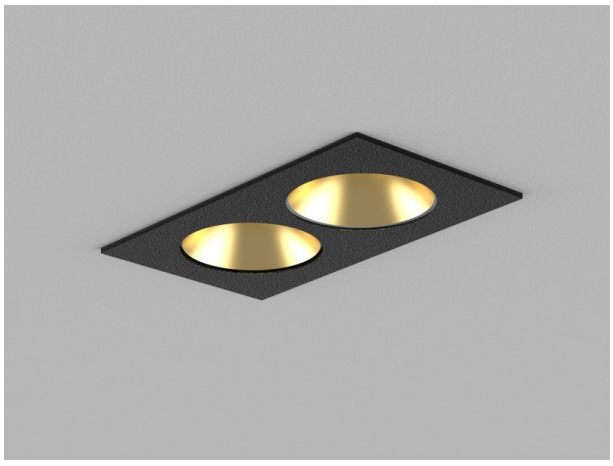

DRAWING

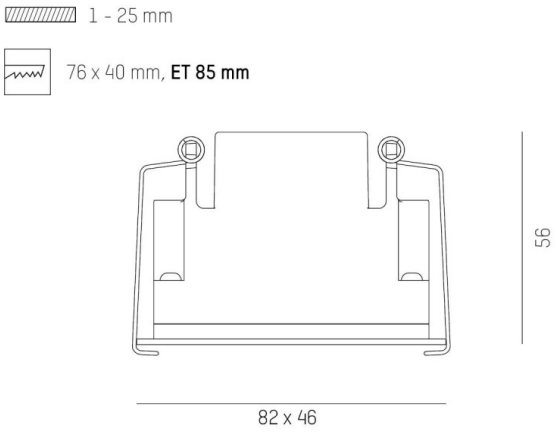

TECHNICAL DETAILS

Bulb type	LED 4W
Luminous flux [lm]	300
Current sec. [mA]	700
Colour temp. [K]	2700K
CRI	>90
UGR	<16
Optics	vacuum deposited aluminium reflector
Converter	without converter
Dimming	see converter
Light output	direct
Beam angle [°]	36°
Material	aluminium
Length [mm]	82
Width [mm]	46
Height [mm]	56
Ceiling cutout [mm]	76x40
Ceiling thickness [mm]	1-25
Recess depth [mm]	85
IP protection class	IP20
Voltage class	protection cl. II
Shock resistance	IK06
Net weight [kg]	0,25
Colour lamp	black matt
RAL	9005
Colour decor	gold
EAN-Number	9010506246537
Lifetime [h]	L80 B10 50 000
Energy efficiency cl.	F

LIGHT DISTRIBUTION CURVE

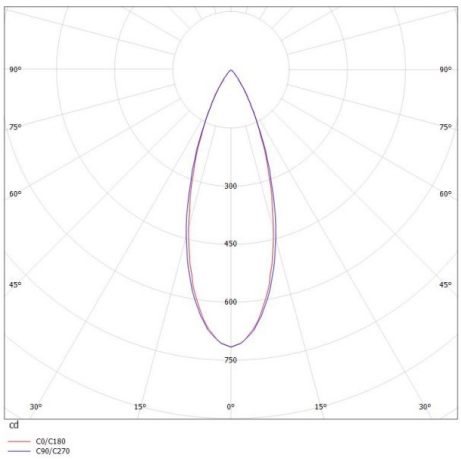

CE

The values are rated values. Power and luminous flux are initially subject to a tolerance of +/- 10%. Colour temperature tolerance: +/- 150 K. The values apply to an ambient temperature of 25°C unless otherwise specified.