MOLTO LUCE®

HENDRIK

590-011120300s600

HENDRIK M W SURFACE MOUNTED WALL LUMINAIRE made of aluminium, black, similar to RAL 9005, decor light grey,Decorative felt panel made of synthetic polymers OEKO-TEX Standard 100 beam 170°, light output direct / indirect, with converter, dimmability: not dimmable, IP20 Flame retardant according to DIN EN 13501 B-s2, d0

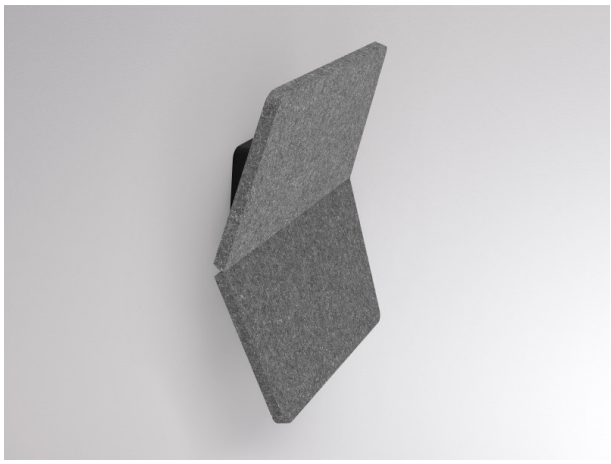

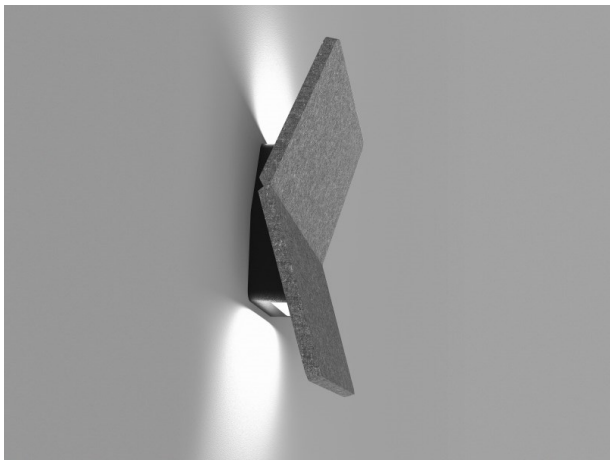

DRAWING

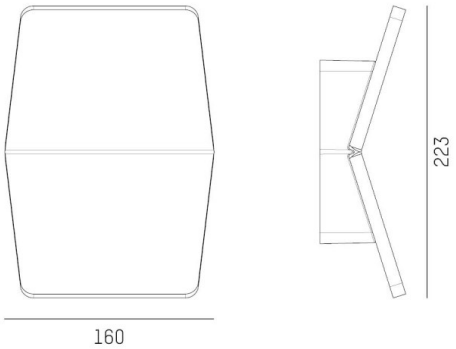

LIGHT DISTRIBUTION CURVE

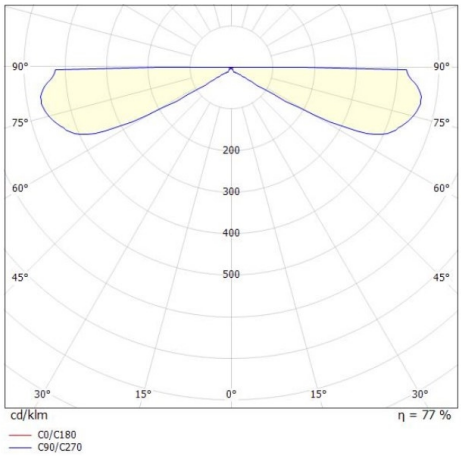

TECHNICAL DETAILS

System perform. [W]	13
Bulb type	LED
Luminous flux [lm]	350
Colour temp. [K]	2700/3000K
CRI	>90
Optics	Decorative felt panel made of synthetic polymers
Designer	INHOUSE
Converter	with converter
Dimming	not dimmable
Light output	direct / indirect
Beam angle [°]	170°
Voltage [V]	220-240V 50/60Hz
Material	aluminium
Length [mm]	65,6
Width [mm]	160
Height [mm]	63
IP protection class	IP20
Voltage class	protection cl. I
Net weight [kg]	0,50
Colour lamp	black
RAL	9005
Colour decor	light grey
EAN-Number	9010506466171
Lifetime [h]	50 000 L80 B10
Energy efficiency cl.	E

CE

The values are rated values. Power and luminous flux are initially subject to a tolerance of +/- 10%. Colour temperature tolerance: +/- 150 K. The values apply to an ambient temperature of 25°C unless otherwise specified.