MOLTO LUCE®

TRAIL

610-0201002000040

TRAIL RAIL SUPPORT RAIL made of steel sheet, grey, similar to RAL 9006, dimmability: not dimmable, through wiring 5x2,5mm² + 6x1,5mm², IP20

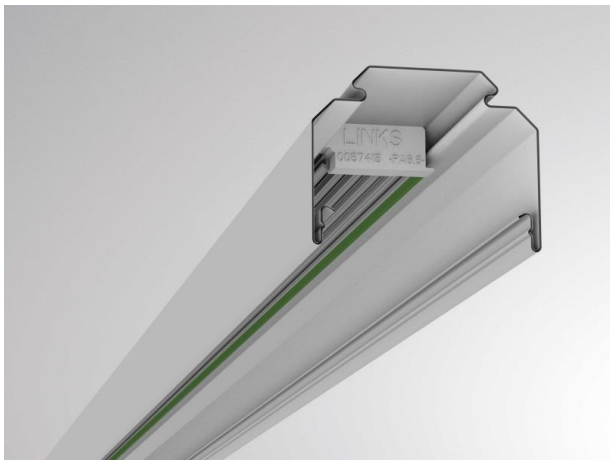

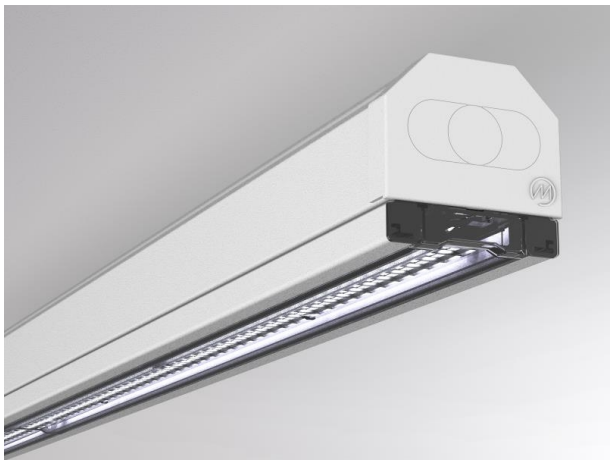

DRAWING

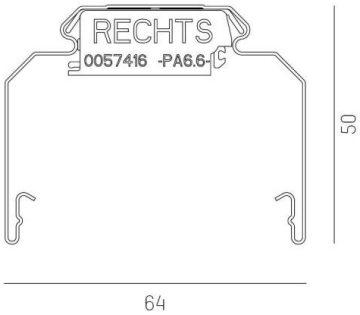

TECHNICAL DETAILS

Dimming	not dimmable
Through wiring	5x2,5mm² + 6x1,5mm²
Material	steel sheet
Length [mm]	1137
Width [mm]	64
Height [mm]	50
IP protection class	IP20
Net weight [kg]	1,40
Colour lamp	grey
RAL	9006
EAN-Number	9010506346824

LIGHT DISTRIBUTION CURVE

CE

The values are rated values. Power and luminous flux are initially subject to a tolerance of +/- 10%. Colour temperature tolerance: +/- 150 K. The values apply to an ambient temperature of 25°C unless otherwise specified.