MOLTO LUCE®

TRAIL

610-1257011317050

TRAIL LIGHT INSERT CUBIC WB MOUNTING RAIL LIGHT INSERT made of aluminium, white, similar to RAL 9016,PMMA diffuser cubic beam 90°, light output direct / indirect, UGR <25, with converter, max. 250mA, dimmability: not dimmable, through wiring 7-polig, IP54

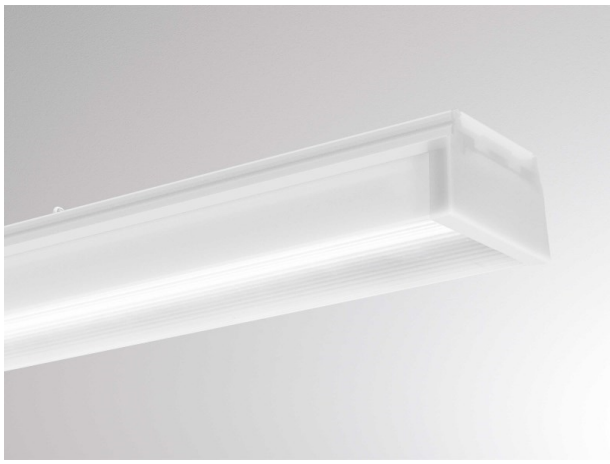

DRAWING

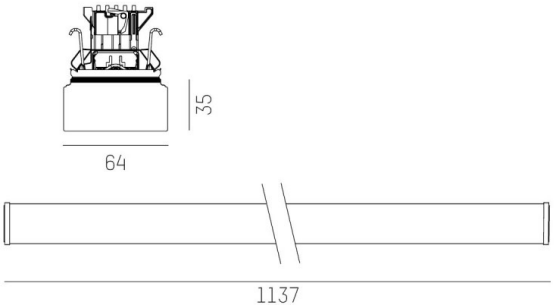

LIGHT DISTRIBUTION CURVE

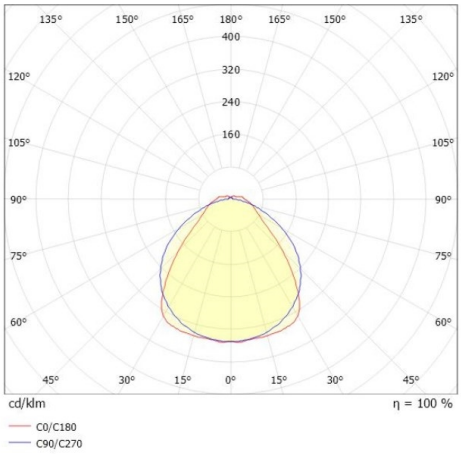

TECHNICAL DETAILS

System perform. [W]	25
Bulb type	LED
Luminous flux [lm]	4100
Current sec. [mA]	250
Colour temp. [K]	3500K
CRI	>80
UGR	<25
Optics	PMMA diffuser cubic
Designer	INHOUSE
Converter	with converter
Dimming	not dimmable
Light output	direct / indirect
Beam angle [°]	90°
Voltage [V]	220-240V 50/60Hz
Through wiring	7-polig
Material	aluminium
Length [mm]	1137
Width [mm]	64
Height [mm]	25
IP protection class	IP54
Voltage class	protection cl. I
Shock resistance	IK02
Net weight [kg]	1,99
Colour lamp	white
RAL	9016
EAN-Number	9010506886504
Lifetime [h]	L90 B10 100 000
Ambient temperature	-20° bis +50°
Energy efficiency cl.	C
No. of luminaires B16A	33
IFS suitable	Yes

The values are rated values. Power and luminous flux are initially subject to a tolerance of +/- 10%. Colour temperature tolerance: +/- 150 K. The values apply to an ambient temperature of 25°C unless otherwise specified.