GRID RIDE

629-70122966

GRID RIDE SYSTEM INSERT SYSTEM SPOTLIGHT made of metal, black, similar to RAL 9005,lens optic with anti-glare grid beam 30°, light output direct, UGR <19, swiveling 355°, tilting 90°, with converter, max. 700mA, dimmability: not dimmable, through wiring 0,75mm², IP20

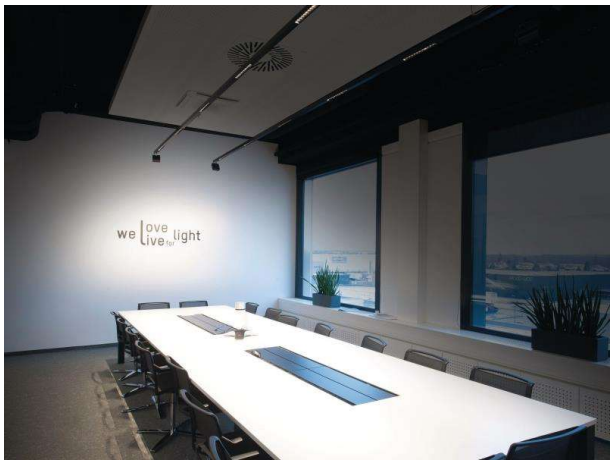

DRAWING

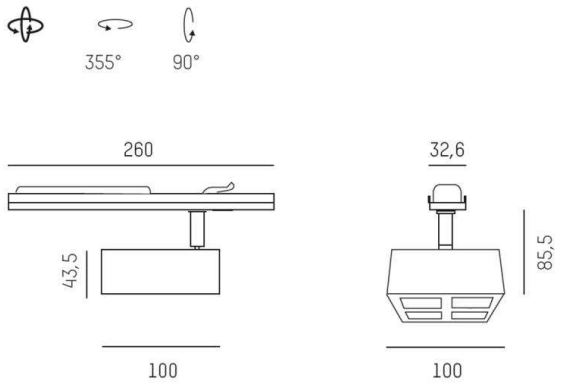

LIGHT DISTRIBUTION CURVE

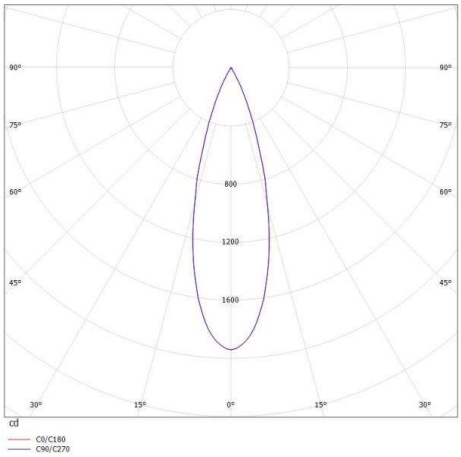

TECHNICAL DETAILS

System perform. [W]	10
Bulb type	LED
Luminous flux [lm]	570
Current sec. [mA]	700
Colour temp. [K]	3000K
CRI	>90
UGR	<19
Optics	lens optics with glare control louvre
Designer	INHOUSE
Converter	with converter
Dimming	not dimmable
Light output	direct
Beam angle [°]	30°
Voltage [V]	220-240V 50/60Hz
Through wiring	0,75mm²
Material	metal
Height [mm]	86
Diameter [mm]	100
IP protection class	IP20
Voltage class	protection cl. I
Net weight [kg]	0,70
Color lamp	black
RAL	9005
EAN-Number	9008905618178
Lifetime [h]	L80 B10 50 000
Energy efficiency cl.	G

CE

The values are rated values. Power and luminous flux are initially subject to a tolerance of +/- 10%. Colour temperature tolerance: +/- 150 K. The values apply to an ambient temperature of 25°C unless otherwise specified.