LENS

646-10801032908d

LENS SHORT SINGLE PDI SUSPENSION made of die-cast aluminium, natural anodised, similar to RAL 9006,lens optic with anti-glare grid beam for single workplace, light output direct / indirect, UGR <16, with converter, max. 250mA, dimmability: DALI, cable transparent, adapter/ceiling base grey, pendant length 1500mm, IP20

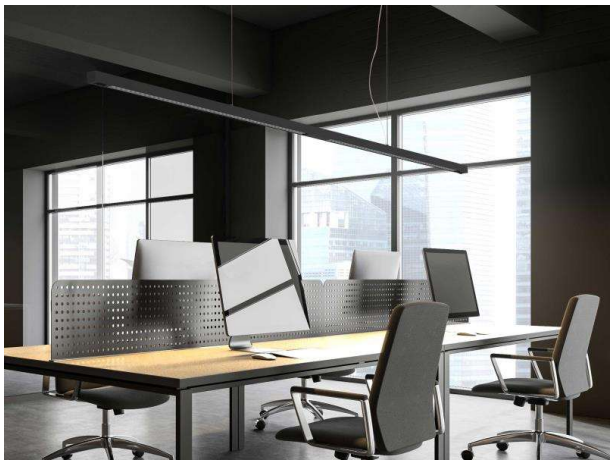

DRAWING

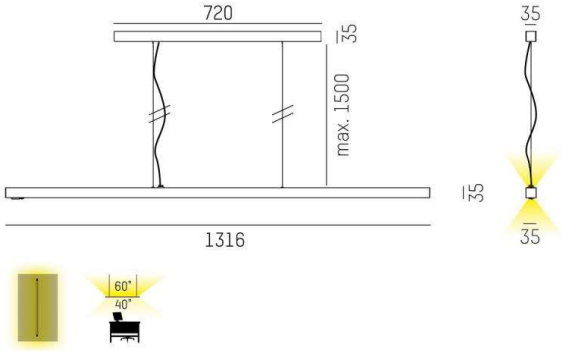

TECHNICAL DETAILS

System perform. [W]	44
Bulb type	LED
Luminous flux [lm]	5854
Current sec. [mA]	250
Colour temp. [K]	3000K
CRI	>80
UGR	<16
Optics	lens optics with glare control louvre
Designer	INHOUSE
Converter	with converter
Light output	direct / indirect
Beam angle [°]	für Einzelarbeitsplatz
Voltage [V]	220-240V AC/DC
Material	die-cast aluminium
Length [mm]	1316
Width [mm]	35
Height [mm]	35
Pendant length [mm]	1500
IP protection class	IP20
Voltage class	protection cl. I
Shock resistance	IK05
Net weight [kg]	4,09
Colour lamp	natural anodised
RAL	9006
Colour adapter/ceiling base	grey
Electric wire	transparent
EAN-Number	9010506807646
Lifetime [h]	L80 B10 50 000
Energy efficiency cl.	E
No. of luminaires B16A	18

LIGHT DISTRIBUTION CURVE

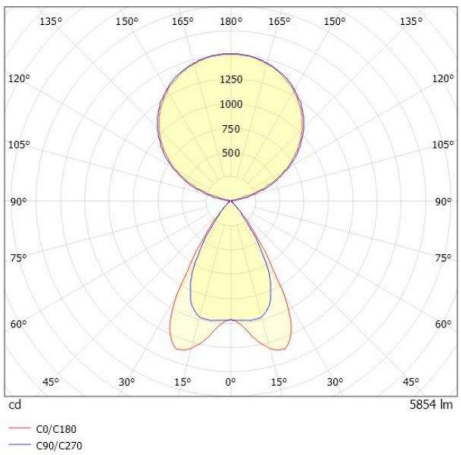

CE

The values are rated values. Power and luminous flux are initially subject to a tolerance of +/- 10%. Colour temperature tolerance: +/- 150 K. The values apply to an ambient temperature of 25°C unless otherwise specified.