TRIGGA

662-001020529150

TRIGGA SPOT VOLARE TRACK SPOTLIGHT WITH 2 PH VOLARE ADAPTER made of aluminium, white, similar to RAL 9016,anti-glare LFO lens due to microfacetted structure beam 55°, light output direct, swiveling 350°, tilting 90°, with converter, max. 350mA, dimmability: not dimmable, adapter/ceiling base chrome, IP20

DRAWING

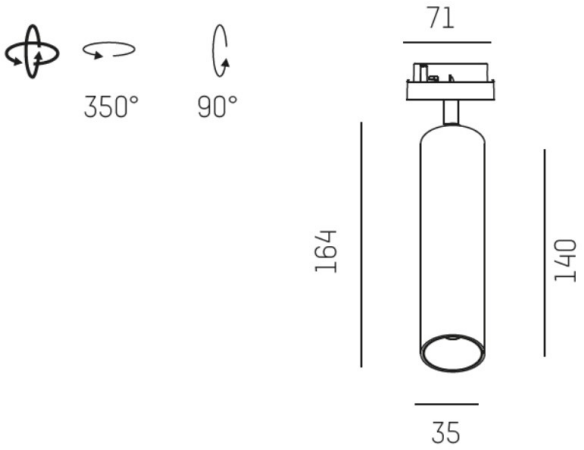

TECHNICAL DETAILS

System perform. [W]	6
Bulb type	LED
Luminous flux [lm]	290
Current sec. [mA]	350
Colour temp. [K]	3000K
CRI	>90
Optics	LFO lens
Designer	Serge Cornelissen
Converter	with converter
Dimming	not dimmable
Light output	direct
Beam angle [°]	55°
Voltage [V]	220-240V 50/60Hz
Material	aluminium
Length [mm]	71,5
Height [mm]	164
Diameter [mm]	35
IP protection class	IP20
Voltage class	protection cl. I
Net weight [kg]	0,42
Colour lamp	white
RAL	9016
Colour adapter/ceiling base	chrome
EAN-Number	9008905768514
Lifetime [h]	L80 B10 50 000
Energy efficiency cl.	G
No. of luminaires B16A	8

LIGHT DISTRIBUTION CURVE

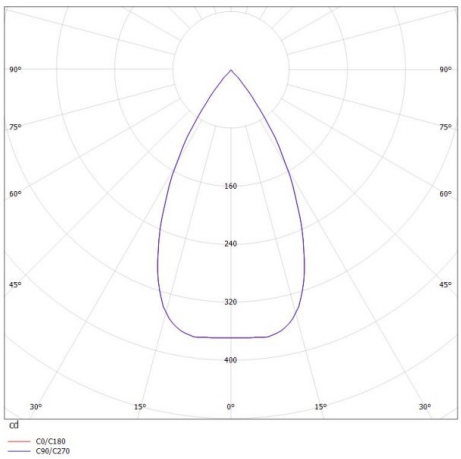

The values are rated values. Power and luminous flux are initially subject to a tolerance of +/- 10%. Colour temperature tolerance: +/- 150 K. The values apply to an ambient temperature of 25°C unless otherwise specified.