MOLTO LUCE®

# TRIGGA

**662-007020223550**

TRIGGA TRIMLESS R RECESSED SPOTLIGHT made of aluminium, white, similar to RAL 9016,anti-glare LFO lens due to microfacetted structure beam 30°, light output direct, UGR <16, swiveling 350°, tilting 30°, without converter, max. 500mA, dimmability: see converter, IP20

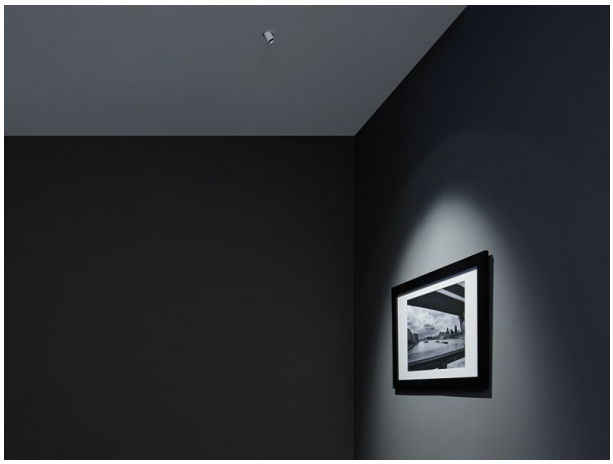

## DRAWING

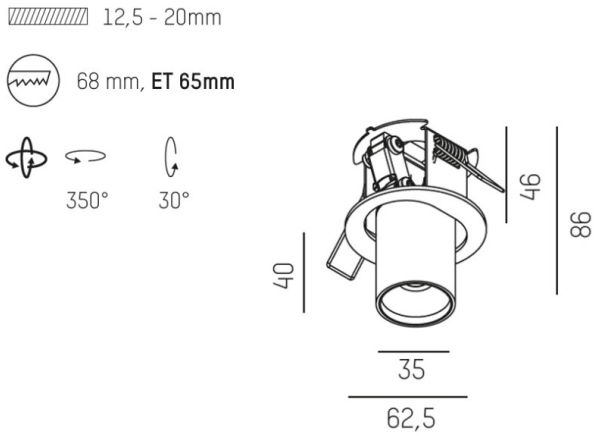


## TECHNICAL DETAILS

| | |
|---|---|
| Bulb type | LED 6W |
| Luminous flux [lm] | 300 |
| Current sec. [mA] | 500 |
| Colour temp. [K] | 2700K |
| CRI | >90 |
| UGR | <16 |
| Optics | LFO lens |
| Designer | Serge Cornelissen |
| Converter | without converter |
| Dimming | see converter |
| Light output | direct |
| Beam angle [°] | 30° |
| Material | aluminium |
| | |
| Length [mm] | 62,5 |
| Height [mm] | 86 |
| Diameter [mm] | 62,5 |
| Ceiling cutout [mm] | 68 |
| Ceiling thickness [mm] | 12,5-20mm |
| Recess depth [mm] | 65 |
| IP protection class | IP20 |
| Voltage class | protection cl. II |
| Net weight [kg] | 0,37 |
| | |
| Colour lamp | white |
| RAL | 9016 |
| EAN-Number | 9008905744600 |
| Lifetime [h] | L80 B10 50 000 |
| Energy efficiency cl. | G |

## LIGHT DISTRIBUTION CURVE

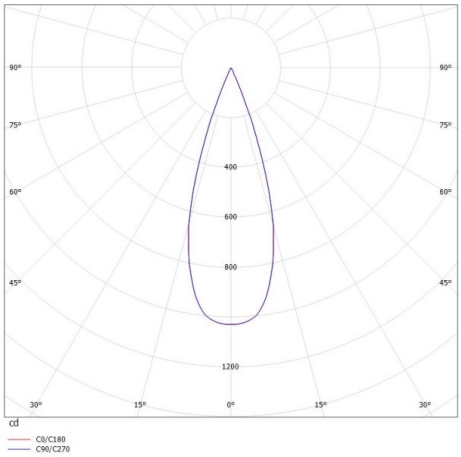


CE

The values are rated values. Power and luminous flux are initially subject to a tolerance of +/- 10%. Colour temperature tolerance: +/- 150 K. The values apply to an ambient temperature of 25°C unless otherwise specified.