TRIGGA

662-009070523660

TRIGGA LOG 2.1 EINSATZ SYSTEM SPOTLIGHT made of aluminium, black matt, similar to RAL 9005,anti-glare LF0 lens due to microfacetted structure beam 55°, light output direct, UGR <16, swiveling 350°, tilting 30°, with converter, max. 500mA, dimmability: not dimmable, IP20

DRAWING

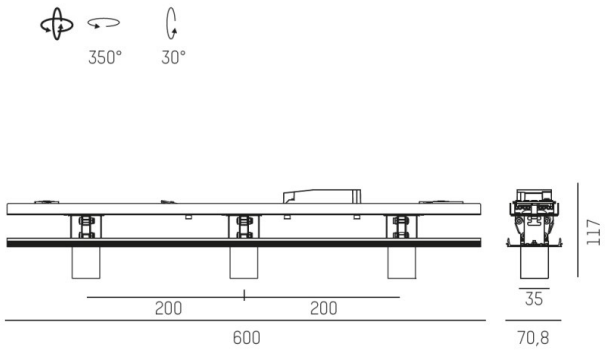

TECHNICAL DETAILS

System perform. [W]	22
Bulb type	LED
Luminous flux [lm]	1050
Current sec. [mA]	500
Colour temp. [K]	2700K
CRI	>90
UGR	<16
Optics	LF0 lens
Designer	Serge Cornelissen
Converter	with converter
Dimming	not dimmable
Light output	direct
Beam angle [°]	55°
Voltage [V]	220-240V 50/60Hz
Material	aluminium
Width [mm]	71
Height [mm]	117
IP protection class	IP20
Voltage class	protection cl. I
Net weight [kg]	2,94
Colour lamp	black matt
RAL	9005
EAN-Number	9008905745652
Lifetime [h]	L80 B10 50 000
Energy efficiency cl.	G
No. of luminaires B16A	53

LIGHT DISTRIBUTION CURVE

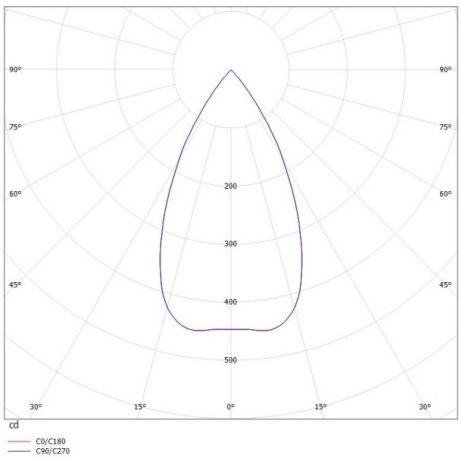

CE

The values are rated values. Power and luminous flux are initially subject to a tolerance of +/- 10%. Colour temperature tolerance: +/- 150 K. The values apply to an ambient temperature of 25°C unless otherwise specified.