MOLTO LUCE®

TRIGGA

662-011040223660v1

TRIGGA 1 SD WALL / CEILING LUMINAIRE made of aluminium, black matt, similar to RAL 9005,anti-glare LFO lens due to microfacetted structure beam 30°, light output direct, UGR <16, swiveling 350°, tilting 70°, with converter, max. 700mA, dimmability: not dimmable, IP20

DRAWING

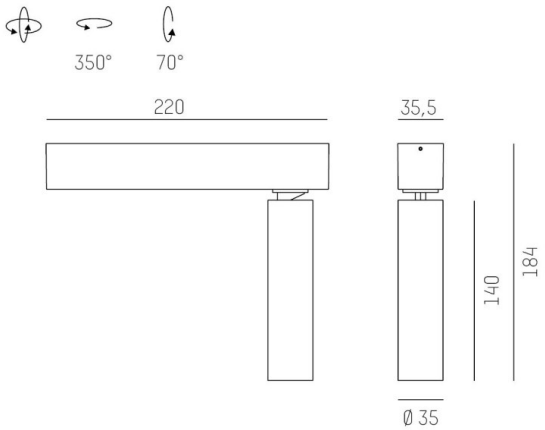

LIGHT DISTRIBUTION CURVE

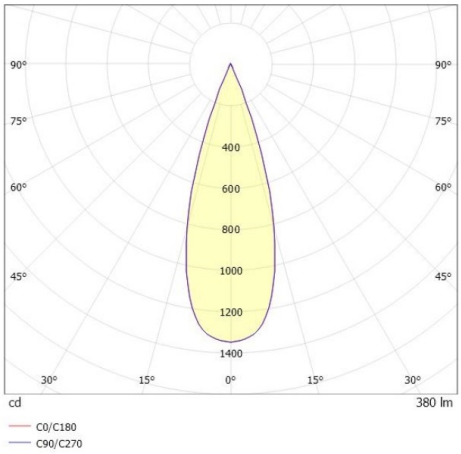

TECHNICAL DETAILS

System perform. [W]	11
Bulb type	LED
Luminous flux [lm]	380
Current sec. [mA]	700
Colour temp. [K]	2700K
CRI	>90
UGR	<16
Optics	LFO lens
Designer	Serge Cornelissen
Converter	with converter
Dimming	not dimmable
Light output	direct
Beam angle [°]	30°
Voltage [V]	220-240V 50/60Hz
Material	aluminium
Length [mm]	183,3
Width [mm]	35,5
Height [mm]	184
Diameter [mm]	35
IP protection class	IP20
Voltage class	protection cl. II
Net weight [kg]	0,81
Colour lamp	black matt
RAL	9005
EAN-Number	9010506345728
Lifetime [h]	L80 B10 50 000
Energy efficiency cl.	G
No. of luminaires B16A	27

CE

The values are rated values. Power and luminous flux are initially subject to a tolerance of +/- 10%. Colour temperature tolerance: +/- 150 K. The values apply to an ambient temperature of 25°C unless otherwise specified.