MOLTO LUCE®

VIBO

668-00201082955d

VIBO SD DIMM SURFACE MOUNTED SPOTLIGHT made of aluminium, white, similar to RAL 9016,stray light-free hexagonal lens beam 35°, light output direct, UGR <16, with converter, max. 500mA, dimmability: DALI, IP20

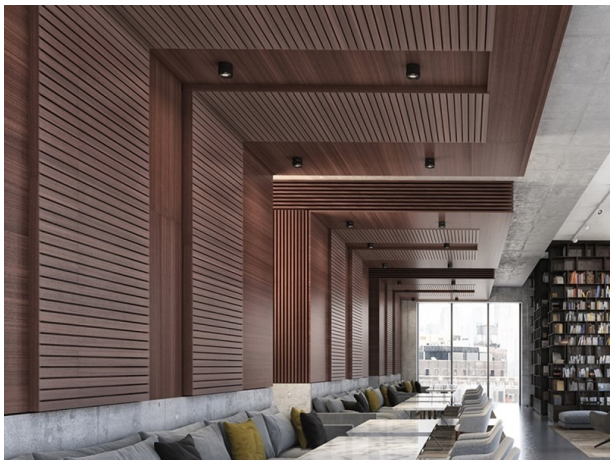

DRAWING

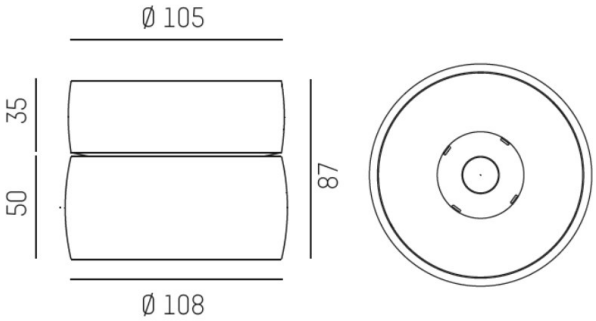

TECHNICAL DETAILS

System perform. [W]	8
Bulb type	LED
Luminous flux [lm]	360
Current sec. [mA]	500
Colour temp. [K]	3000K
CRI	>90
UGR	<16
Optics	stray light-free hexagonal lens
Designer	INHOUSE
Converter	with converter
Light output	direct
Beam angle [°]	35°
Voltage [V]	220-240V 50/60Hz
Material	aluminium
Height [mm]	87
Diameter [mm]	108
IP protection class	IP20
Voltage class	protection cl. I
Net weight [kg]	0,71
Colour lamp	white
RAL	9016
EAN-Number	9008905781858
Lifetime [h]	L80 B10 50 000
Energy efficiency cl.	G
No. of luminaires B16A	50

LIGHT DISTRIBUTION CURVE

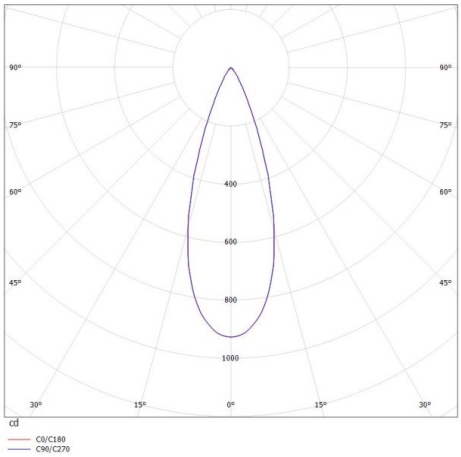

CE

The values are rated values. Power and luminous flux are initially subject to a tolerance of +/- 10%. Colour temperature tolerance: +/- 150 K. The values apply to an ambient temperature of 25°C unless otherwise specified.