# VIBO

**668-004010229550**

VIBO VOLARE TRACK SPOTLIGHT WITH 2 PH VOLARE ADAPTER made of aluminium, white, similar to RAL 9016,stray light-free hexagonal lens beam 10°, light output direct, UGR <16, swiveling 350°, tilting 30°, with converter, max. 500mA, dimmability: not dimmable, adapter/ceiling base white matt, IP20

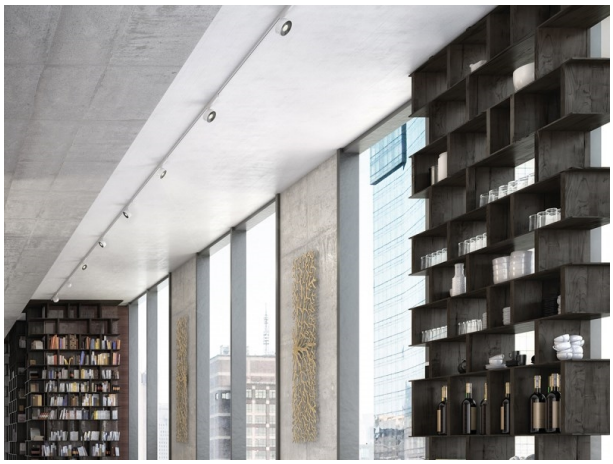

## DRAWING

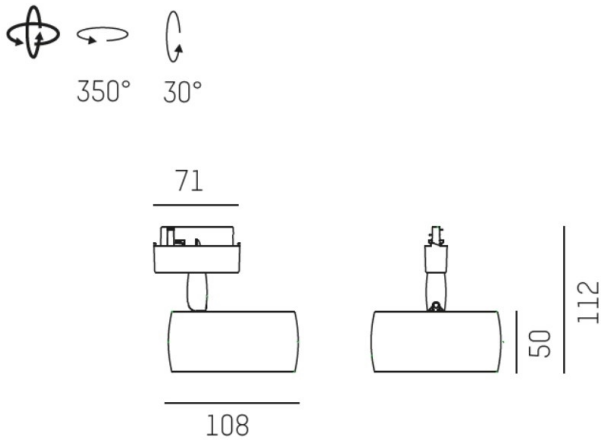


## LIGHT DISTRIBUTION CURVE

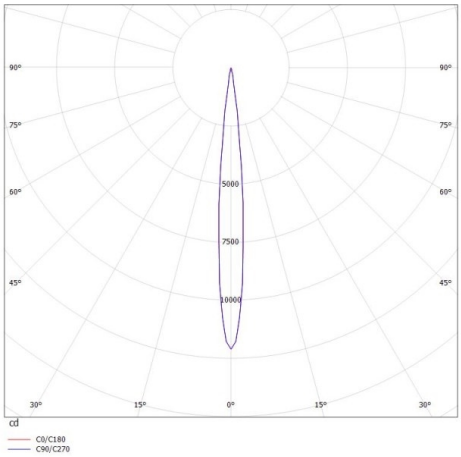


## TECHNICAL DETAILS

| | |
|---|---|
| System perform. [W] | 8 |
| Bulb type | LED |
| Luminous flux [lm] | 440 |
| Current sec. [mA] | 500 |
| Colour temp. [K] | 3000K |
| CRI | >90 |
| UGR | <16 |
| Optics | stray light-free hexagonal lens |
| Designer | INHOUSE |
| Converter | with converter |
| Dimming | not dimmable |
| Light output | direct |
| Beam angle [°] | 10° |
| Voltage [V] | 220-240V 50/60Hz |
| Material | aluminium |
| | |
| Length [mm] | 71 |
| Height [mm] | 112 |
| Diameter [mm] | 108 |
| Troat [mm] | 112 |
| IP protection class | IP20 |
| Voltage class | protection cl. I |
| Net weight [kg] | 0,47 |
| | |
| Colour lamp | white |
| RAL | 9016 |
| Colour adapter/ceiling base | white matt |
| EAN-Number | 9008905782213 |
| Lifetime [h] | L80 B10 50 000 |
| Energy efficiency cl. | G |
| No. of luminaires B16A | 50 |

CE

The values are rated values. Power and luminous flux are initially subject to a tolerance of +/- 10%. Colour temperature tolerance: +/- 150 K. The values apply to an ambient temperature of 25°C unless otherwise specified.