MOLTO LUCE®

VIBO

668-00501022966r

VIBO VOLARE DIM TRACK SPOTLIGHT WITH 2 PH VOLARE ADAPTER made of aluminium, black matt, similar to RAL 9005,stray light-free hexagonal lens beam 10°, light output direct, UGR <16, swiveling 350°, tilting 30°, with converter, max. 500mA, dimmability: Loxone Air, adapter/ceiling base black matt, IP20

DRAWING

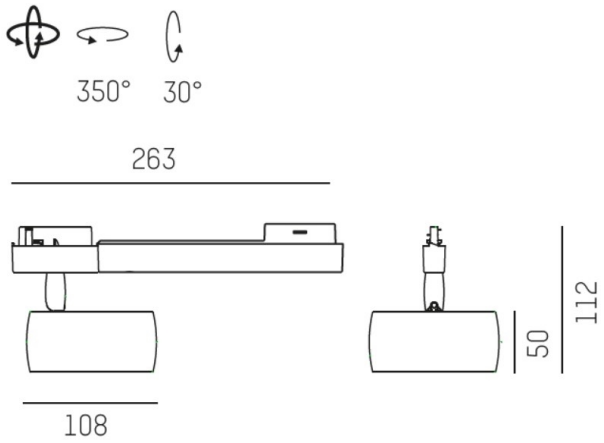

LIGHT DISTRIBUTION CURVE

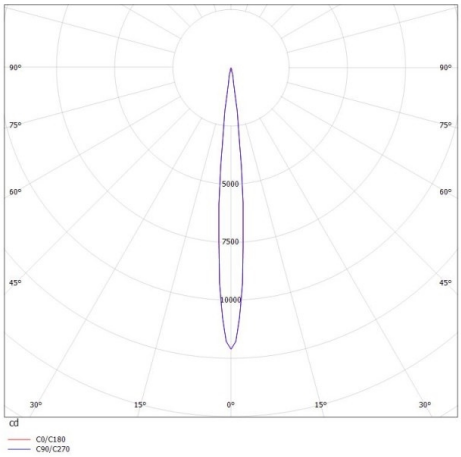

TECHNICAL DETAILS

System perform. [W]	8
Bulb type	LED
Luminous flux [lm]	440
Current sec. [mA]	500
Colour temp. [K]	3000K
CRI	>90
UGR	<16
Optics	stray light-free hexagonal lens
Designer	INHOUSE
Converter	with converter
Light output	direct
Beam angle [°]	10°
Voltage [V]	220-240V 50/60Hz
Material	aluminium
Length [mm]	263
Height [mm]	112
Diameter [mm]	108
Troat [mm]	112
IP protection class	IP20
Voltage class	protection cl. II
Net weight [kg]	0,50
Colour lamp	black matt
RAL	9005
Colour adapter/ceiling base	black matt
EAN-Number	9010506227000
Lifetime [h]	L80 B10 50 000
Energy efficiency cl.	G

CE

The values are rated values. Power and luminous flux are initially subject to a tolerance of +/- 10%. Colour temperature tolerance: +/- 150 K. The values apply to an ambient temperature of 25°C unless otherwise specified.