MOLTO LUCE®

ZEN

68-636501ww

ZEN RECESSED SPOTLIGHT made of aluminium, white, light output direct, without converter, max. 500mA, dimmability: see converter, IP40

DRAWING

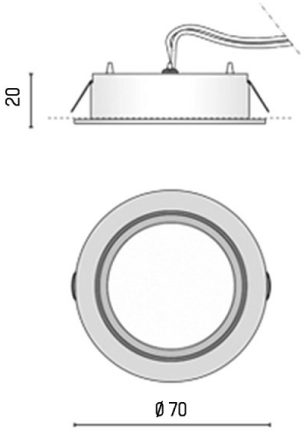

TECHNICAL DETAILS

System perform. [W]	2
Bulb type	LED 2W
Luminous flux [lm]	199
Current sec. [mA]	500
Colour temp. [K]	3000K
CRI	>80
Converter	without converter
Dimming	see converter
Light output	direct
Material	aluminium
Diameter [mm]	70
Ceiling cutout [mm]	60
Recess depth [mm]	20
IP protection class	IP40
Voltage class	protection cl. III
Net weight [kg]	0,07
Colour lamp	white
Lifetime [h]	35 000
Energy efficiency cl.	F

LIGHT DISTRIBUTION CURVE

CE

The values are rated values. Power and luminous flux are initially subject to a tolerance of +/- 10%. Colour temperature tolerance: +/- 150 K. The values apply to an ambient temperature of 25°C unless otherwise specified.