MOLTO LUCE®

DARK NIGHT S

684-00103052405v1

DARK NIGHT SMALL R RECESSED SPOTLIGHT made of aluminium, white, similar to RAL 9016, decor black,high-efficiently vacuum deposited aluminium reflector beam 40°, light output direct, UGR <16, without converter, max. 350/500mA, dimmability: see converter, IP20

DRAWING

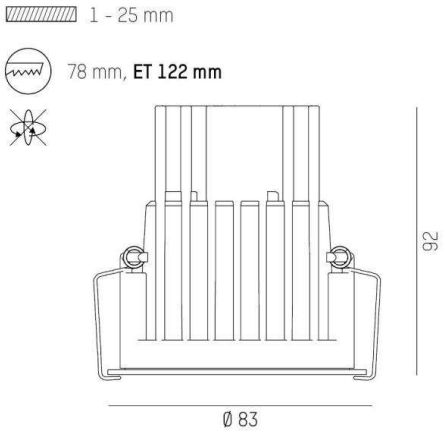

LIGHT DISTRIBUTION CURVE

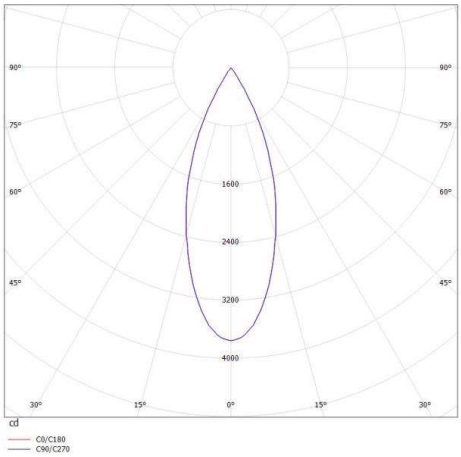

TECHNICAL DETAILS

Bulb type	LED 13/19W
Luminous flux [lm]	1230/1680
Current sec. [mA]	350/500
Colour temp. [K]	4000K
CRI	>90
UGR	<16
Optics	vacuum deposited aluminium reflector
Designer	INHOUSE
Converter	without converter
Dimming	see converter
Light output	direct
Beam angle [°]	40°
Material	aluminium
Height [mm]	92
Diameter [mm]	83
Ceiling cutout [mm]	78
Ceiling thickness [mm]	1-25
Recess depth [mm]	122
IP protection class	IP20
Voltage class	protection cl. II
Shock resistance	IK02
Net weight [kg]	0,36
Colour lamp	white
RAL	9016
Colour decor	black
EAN-Number	9010506113877
Lifetime [h]	L80 B10 50 000
Energy efficiency cl.	D

CE

The values are rated values. Power and luminous flux are initially subject to a tolerance of +/- 10%. Colour temperature tolerance: +/- 150 K. The values apply to an ambient temperature of 25°C unless otherwise specified.