DARK NIGHT XS

684-00304052406v1

DARK NIGHT XS R RECESSED SPOTLIGHT made of aluminium, black matt, similar to RAL 9005, decor gold,high-efficiently vacuum deposited aluminium reflector beam 40°, light output direct, UGR <19, without converter, max. 250/350mA, dimmability: see converter, IP20

DRAWING

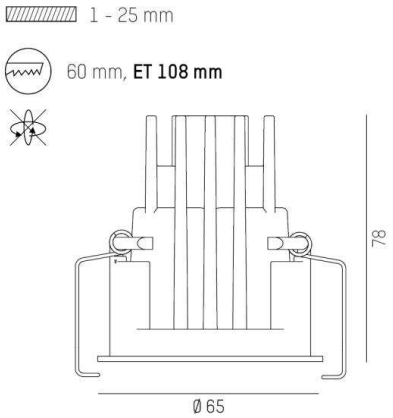

LIGHT DISTRIBUTION CURVE

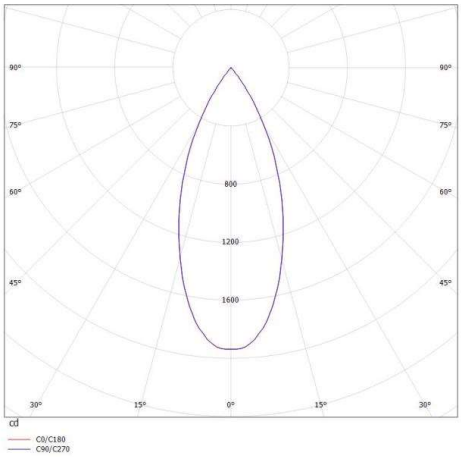

TECHNICAL DETAILS

Bulb type	LED 9/13W
Luminous flux [lm]	960/1280
Current sec. [mA]	250/350
Colour temp. [K]	4000K
CRI	>90
UGR	<19
Optics	vacuum deposited aluminium reflector
Designer	INHOUSE
Converter	without converter
Dimming	see converter
Light output	direct
Beam angle [°]	40°
Material	aluminium
Height [mm]	78
Diameter [mm]	65
Ceiling cutout [mm]	60
Ceiling thickness [mm]	1-25
Recess depth [mm]	108
IP protection class	IP20
Voltage class	protection cl. II
Shock resistance	IK02
Net weight [kg]	0,34
Colour lamp	black matt
RAL	9005
Colour decor	gold
EAN-Number	9010506113983
Lifetime [h]	L80 B10 50 000
Energy efficiency cl.	D

CE

The values are rated values. Power and luminous flux are initially subject to a tolerance of +/- 10%. Colour temperature tolerance: +/- 150 K. The values apply to an ambient temperature of 25°C unless otherwise specified.