MOLTO LUCE®

SYSTEM01.1

697-02000301908k

SYSTEM 01.1 PDI SUSPENSION made of die-cast aluminium, natural anodised, similar to RAL 9006,microprismatic PMMA cover for perfect anti-glare light output direct / indirect, UGR <19, with converter, max. 300mA, dimmability: motion daylight, with motion detector and daylight control, cable transparent, adapter/ceiling base grey, pendant length 1500mm, IP20

DRAWING

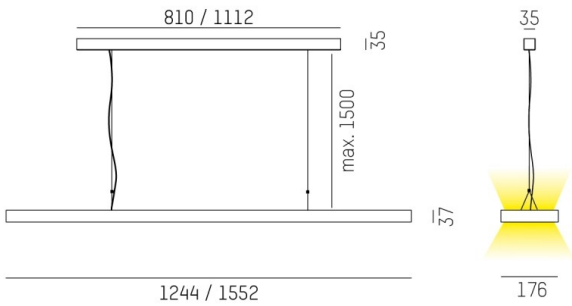

TECHNICAL DETAILS

System perform. [W]	63
Bulb type	LED
Luminous flux [lm]	9430
Current sec. [mA]	300
Colour temp. [K]	3000K
CRI	>80
UGR	<19
Optics	microprismatic cover
Designer	INHOUSE
Converter	with converter
Motion detector	with motion detector and daylight control
Light output	direct / indirect
Voltage [V]	220-240V AC/DC
Material	die-cast aluminium
Length [mm]	1552
Width [mm]	176
Height [mm]	37
Pendant length [mm]	1500
IP protection class	IP20
Voltage class	protection cl. I
Net weight [kg]	7,43
Colour lamp	natural anodised
RAL	9006
Colour adapter/ceiling base	grey
Electric wire	transparent
EAN-Number	9010506352153
Lifetime [h]	L80 B10 50 000
Energy efficiency cl.	F
No. of luminaires B16A	21

LIGHT DISTRIBUTION CURVE

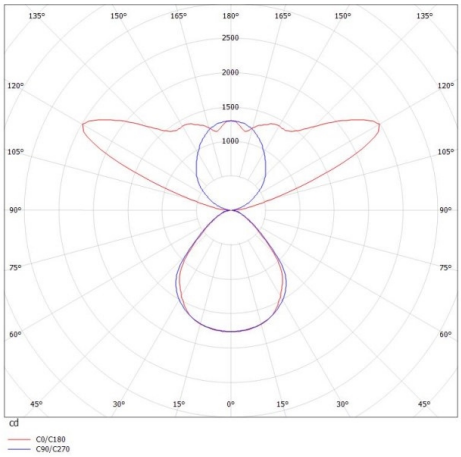

CE

The values are rated values. Power and luminous flux are initially subject to a tolerance of +/- 10%. Colour temperature tolerance: +/- 150 K. The values apply to an ambient temperature of 25°C unless otherwise specified.