MOLTO LUCE®

SYSTEM01.1

697-06001301406t

SYSTEM 01.1 F FLOOR LAMP made of die-cast aluminium, black, similar to RAL 9005,microprismatic PMMA cover for perfect anti-glare light output direct / indirect, UGR <19, with converter, max. 350mA, dimmability: Push Dim, cable black, IP20 rocker button

DRAWING

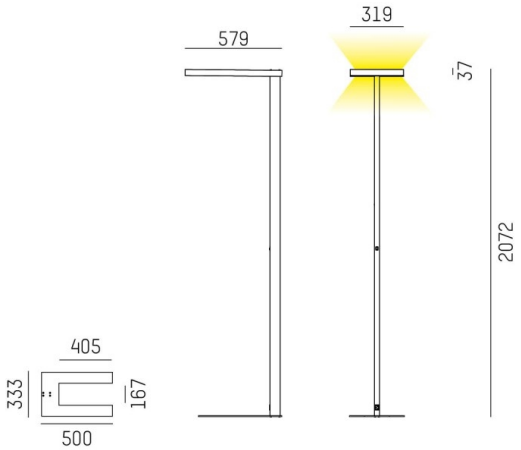

LIGHT DISTRIBUTION CURVE

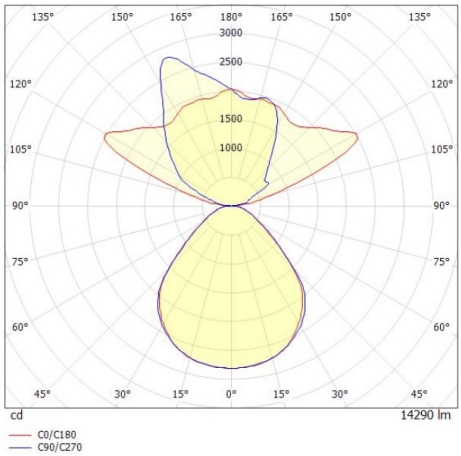

TECHNICAL DETAILS

System perform. [W]	93
Bulb type	LED
Luminous flux [lm]	14290
Current sec. [mA]	350
Colour temp. [K]	4000K
CRI	>80
UGR	<19
Optics	microprismatic cover
Designer	INHOUSE
Converter	with converter
Light output	direct / indirect
Voltage [V]	220-240V AC/DC
Material	die-cast aluminium
Length [mm]	579
Width [mm]	319
Height [mm]	2072
IP protection class	IP20
Voltage class	protection cl. I
Net weight [kg]	12,99
Colour lamp	black
RAL	9005
Electric wire	black
EAN-Number	9010506731897
Lifetime [h]	L80 B10 50 000
Energy efficiency cl.	D
No. of luminaires B16A	18

CE

The values are rated values. Power and luminous flux are initially subject to a tolerance of +/- 10%. Colour temperature tolerance: +/- 150 K. The values apply to an ambient temperature of 25°C unless otherwise specified.