VARIA

703-001010159660

VARIA TRACK TRACK SPOTLIGHT WITH 3 PH ADAPTER made of steel sheet, black matt, similar to RAL 9005,linear optics beam 60°, light output direct, swiveling 350°, tilting + 15°, with converter, max. 1050mA, dimmability: not dimmable, adapter/ceiling base black, IP20

DRAWING

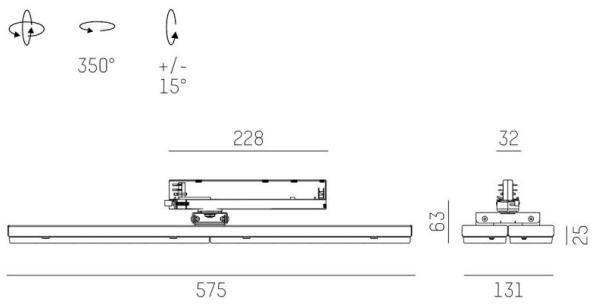

TECHNICAL DETAILS

System perform. [W]	38
Bulb type	LED
Luminous flux [lm]	3640
Current sec. [mA]	1050
Colour temp. [K]	3000K
CRI	MAGIC COLOR>90
Optics	high quality linear optics
Designer	INHOUSE
Converter	with converter
Dimming	not dimmable
Light output	direct
Beam angle [°]	60°
Voltage [V]	220-240V 50/60Hz
Material	steel sheet
Width [mm]	131
Height [mm]	63
IP protection class	IP20
Voltage class	protection cl. II
Net weight [kg]	2,69
Colour lamp	black matt
RAL	9005
Colour adapter/ceiling base	black
EAN-Number	9010506045635
Lifetime [h]	L80 B10 50 000
No. of luminaires B16A	50

LIGHT DISTRIBUTION CURVE

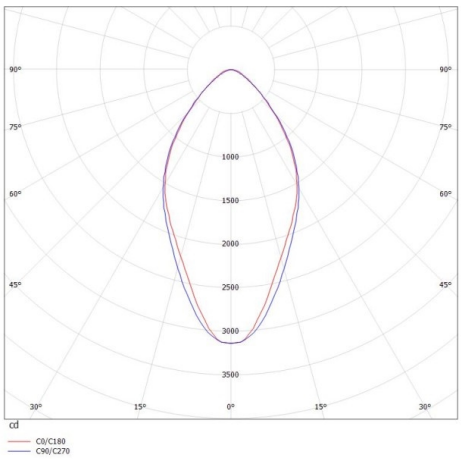

CE

The values are rated values. Power and luminous flux are initially subject to a tolerance of +/- 10%. Colour temperature tolerance: +/- 150 K. The values apply to an ambient temperature of 25°C unless otherwise specified.