MOLTO LUCE®

LOG 50 SYSTEM

715-0317302014400

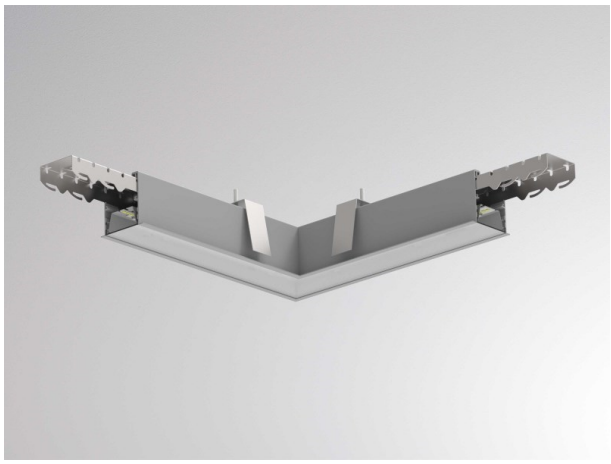

DRAWING

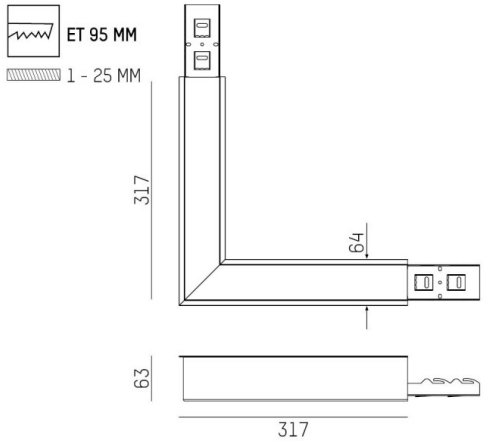

LIGHT DISTRIBUTION CURVE

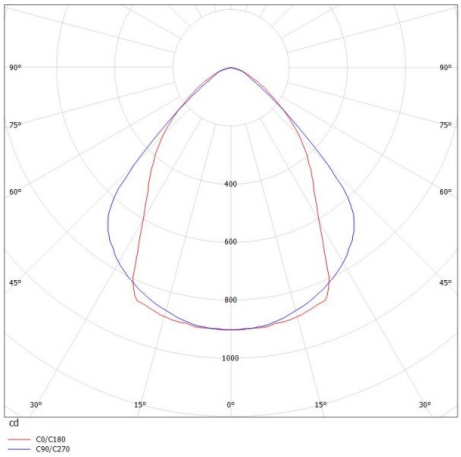

TECHNICAL DETAILS

System perform. [W]	13
Luminous flux [lm]	1620
Current sec. [mA]	700
Colour temp. [K]	4000K
CRI	>80
Optics	microprismatic cover
Designer	INHOUSE
Converter	with converter
Dimming	not dimmable
Light output	direct
Voltage [V]	220-240V 50/60Hz
Through wiring	3x1,5mm²
Material	die-cast aluminium
Length [mm]	317x317
Width [mm]	64
Height [mm]	62
Ceiling cutout [mm]	313x313x56
Ceiling thickness [mm]	1-25
Recess depth [mm]	95
IP protection class	IP20
Voltage class	protection cl. I
Net weight [kg]	2,52
Colour lamp	grey
RAL	9006
EAN-Number	9010506406450
Lifetime [h]	L80 B10 50 000
Energy efficiency cl.	C
No. of luminaires B16A	50

CE

The values are rated values. Power and luminous flux are initially subject to a tolerance of +/- 10%. Colour temperature tolerance: +/- 150 K. The values apply to an ambient temperature of 25°C unless otherwise specified.