LOG 50 SYSTEM

715-07740y3000040

Aluminium cover, white powder-coated, L=4500mm

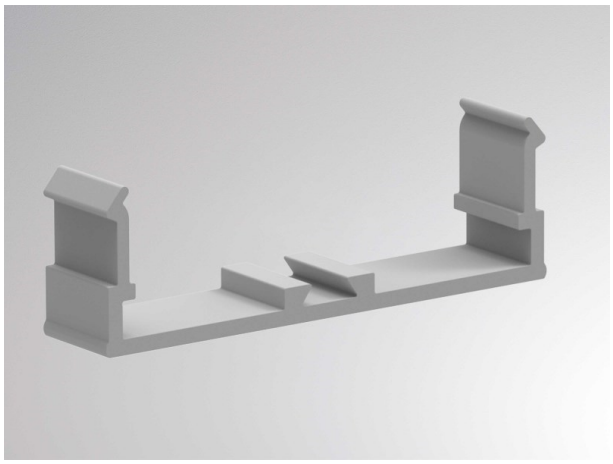

DRAWING

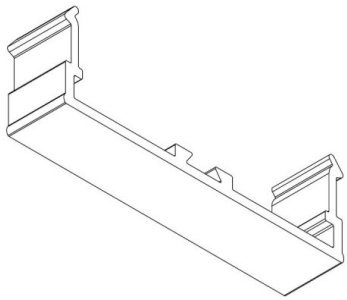

TECHNICAL DETAILS

Designer	INHOUSE
Dimming	not dimmable
Material	die-cast aluminium
Length [mm]	2250
Width [mm]	49
IP protection class	IP20
Net weight [kg]	0,77
Colour lamp	grey
RAL	9006
EAN-Number	9010506449853

LIGHT DISTRIBUTION CURVE

CE

The values are rated values. Power and luminous flux are initially subject to a tolerance of +/- 10%. Colour temperature tolerance: +/- 150 K. The values apply to an ambient temperature of 25°C unless otherwise specified.