VALO

720-00441012466d

VALO SYSTEM SINGLE SPOT SYSTEM SPOTLIGHT black, similar to RAL 9005,high-efficiently vacuum deposited synthetic reflector beam 24°, light output direct, swiveling 355°, tilting 35°, with converter, max. 350mA, dimmability: DALI, adapter/ceiling base white, IP20

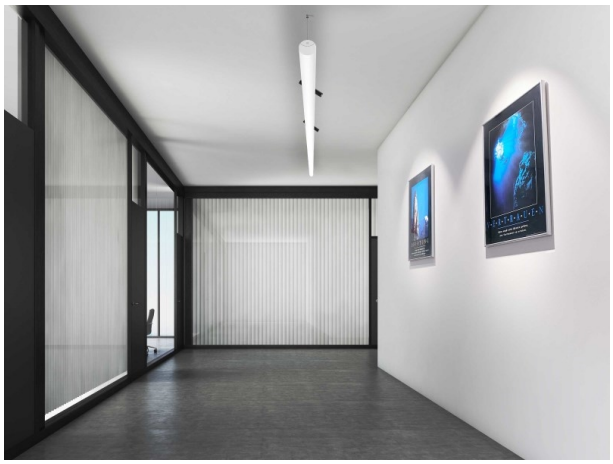

DRAWING

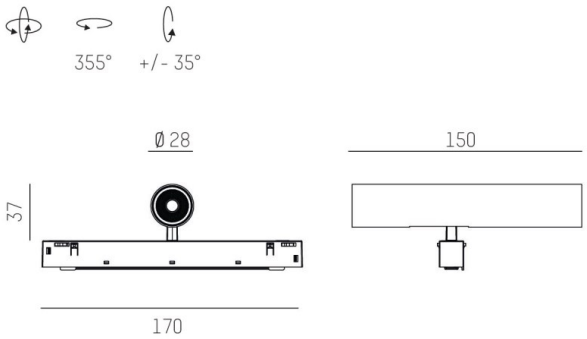

TECHNICAL DETAILS

System perform. [W]	7
Bulb type	LED
Luminous flux [lm]	730
Current sec. [mA]	350
Colour temp. [K]	4000K
CRI	>90
Optics	vacuum deposited synthetic reflector
Designer	INHOUSE
Converter	with converter
Light output	direct
Beam angle [°]	24°
Voltage [V]	48 VDC
Length [mm]	170
Width [mm]	150
Height [mm]	37
Diameter [mm]	28
IP protection class	IP20
Voltage class	protection cl. II
Shock resistance	IK04
Net weight [kg]	0,55
Colour lamp	black
RAL	9005
Colour adapter/ceiling base	white
EAN-Number	9010506239188
Lifetime [h]	L80 B10 50 000
Energy efficiency cl.	D

LIGHT DISTRIBUTION CURVE

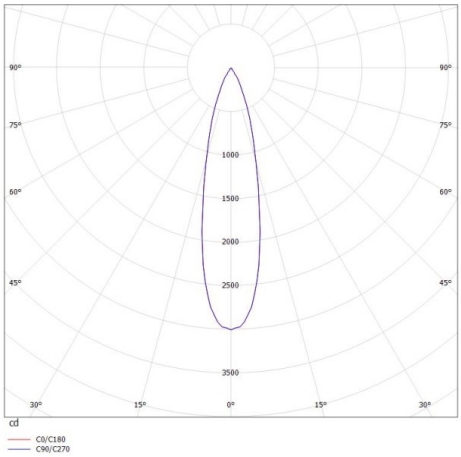

The values are rated values. Power and luminous flux are initially subject to a tolerance of +/- 10%. Colour temperature tolerance: +/- 150 K. The values apply to an ambient temperature of 25°C unless otherwise specified.