MOLTO LUCE®

LOG OUT 2.1

728-101041113800

LOG OUT 2.1 SD WALL / CEILING LUMINAIRE made of die-cast aluminium, natural anodised,satined PMMA opal diffuser light output direct, with converter, dimmability: not dimmable, through wiring 3x1,5mm², IP20

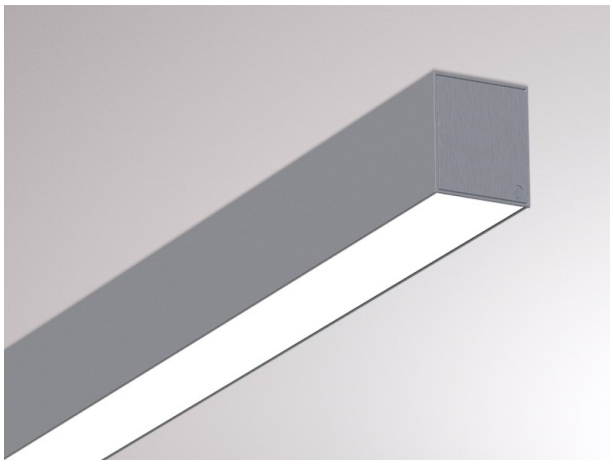

DRAWING

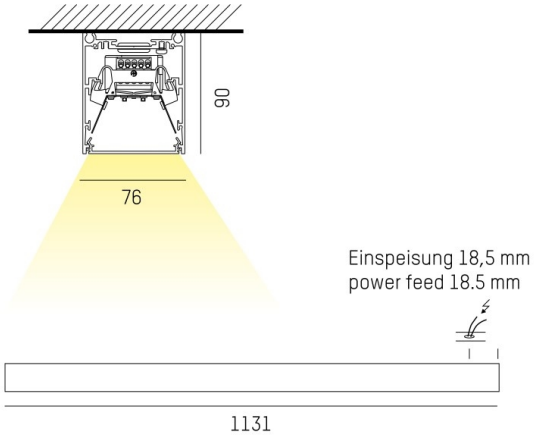

TECHNICAL DETAILS

System perform. [W]	16
Bulb type	LED
Luminous flux [lm]	1980
Colour temp. [K]	2700K
CRI	>80
Optics	PMMA opal diffuser
Designer	INHOUSE
Converter	with converter
Dimming	not dimmable
Light output	direct
Voltage [V]	220-240V 50/60Hz
Through wiring	3x1,5mm²
Material	die-cast aluminium
Length [mm]	1131
Width [mm]	76
Height [mm]	90
IP protection class	IP20
Voltage class	protection cl. I
Net weight [kg]	4,65
Colour lamp	natural anodised
EAN-Number	9010506133011
Lifetime [h]	L80 B10 50 000
Energy efficiency cl.	D
No. of luminaires B16A	50

LIGHT DISTRIBUTION CURVE

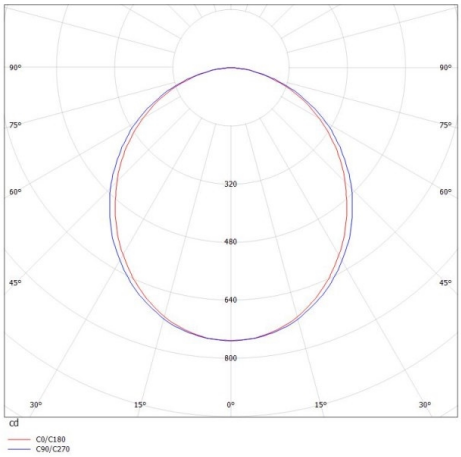

CE

The values are rated values. Power and luminous flux are initially subject to a tolerance of +/- 10%. Colour temperature tolerance: +/- 150 K. The values apply to an ambient temperature of 25°C unless otherwise specified.