MOLTO LUCE®

LOG OUT 2.1

728-10205321966d

LOG OUT 2.1 BINA OFFICE SD SURFACE MOUNTED CEILING LUMINAIRE made of die-cast aluminium, black, similar to RAL 9005, decor black,microprismatic PMMA cover for perfect anti-glare light output direct, UGR <19, with converter, dimmability: DALI, through wiring 3x1,5mm² + 2x0,75mm², IP20 ball-impact resistant according to DIN 18032

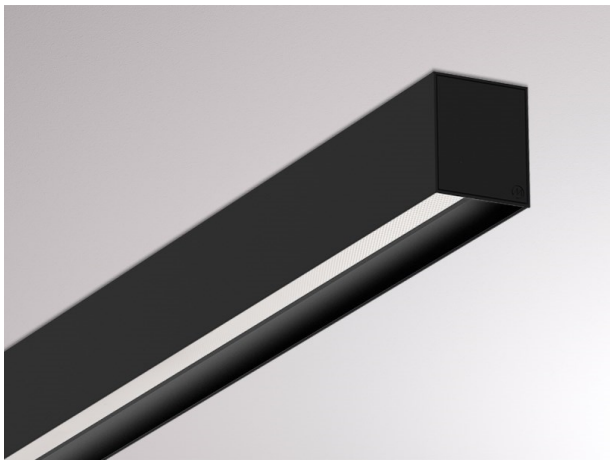

DRAWING

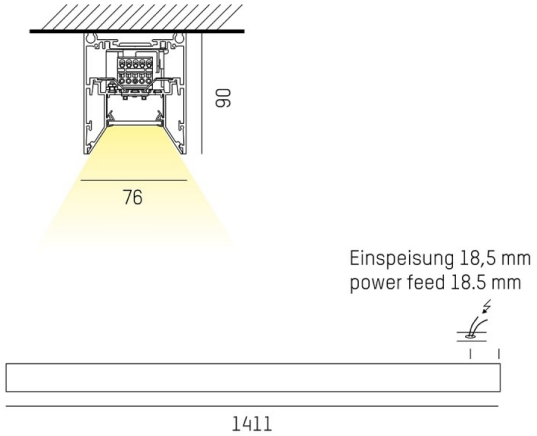

LIGHT DISTRIBUTION CURVE

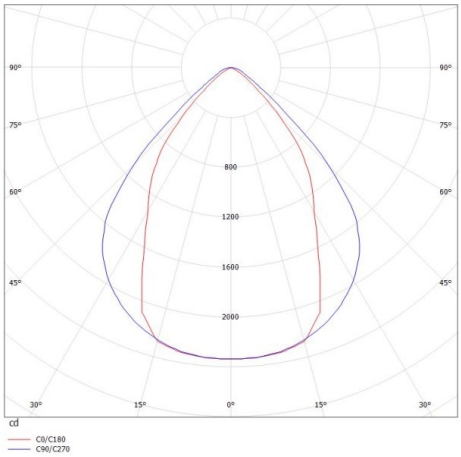

TECHNICAL DETAILS

System perform. [W]	41
Bulb type	LED
Luminous flux [lm]	3540
Colour temp. [K]	3000K
CRI	>80
UGR	<19
Optics	microprismatic cover
Designer	INHOUSE
Converter	with converter
Light output	direct
Voltage [V]	220-240V 50/60Hz
Through wiring	3x1,5mm² + 2x0,75mm²
Material	die-cast aluminium
Length [mm]	1411
Width [mm]	76
Height [mm]	90
IP protection class	IP20
Voltage class	protection cl. I
Shock resistance	IK06
Net weight [kg]	5,28
Colour lamp	black
RAL	9005
Colour decor	black
EAN-Number	9010506167405
Lifetime [h]	L80 B10 50 000
Energy efficiency cl.	D
No. of luminaires B16A	50

CE

The values are rated values. Power and luminous flux are initially subject to a tolerance of +/- 10%. Colour temperature tolerance: +/- 150 K. The values apply to an ambient temperature of 25°C unless otherwise specified.