LOG OUT 2.1 IP54

728-104051119500

LOG OUT 2.1 IP54 SD WALL / CEILING LUMINAIRE made of die-cast aluminium, white, similar to RAL 9016,satined PMMA opal diffuser light output direct, with converter, dimmability: not dimmable, through wiring 3x1,5mm², IP54

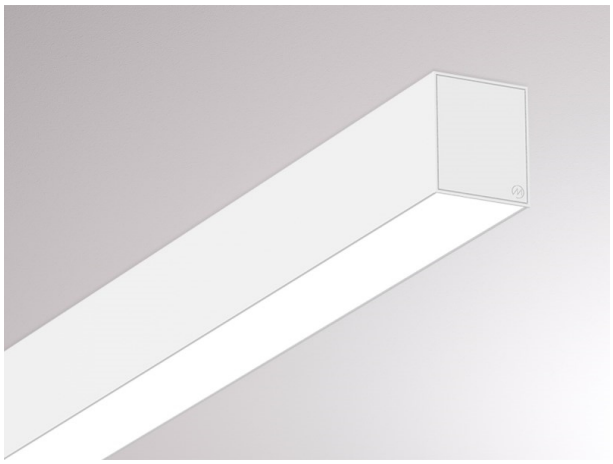

DRAWING

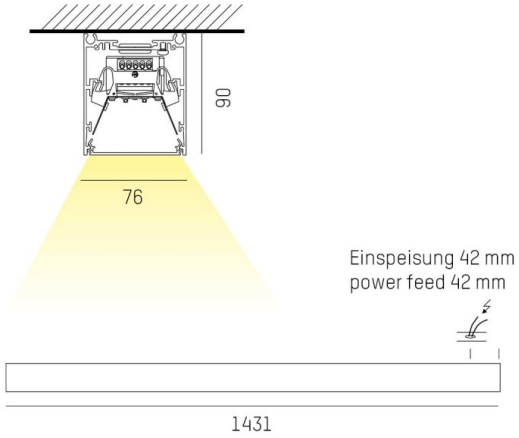

TECHNICAL DETAILS

System perform. [W]	20
Bulb type	LED
Luminous flux [lm]	2550
Colour temp. [K]	3000K
CRI	>80
Optics	PMMA opal diffuser
Designer	INHOUSE
Converter	with converter
Dimming	not dimmable
Light output	direct
Voltage [V]	220-240V 50/60Hz
Through wiring	3x1,5mm²
Material	die-cast aluminium
Length [mm]	1431
Width [mm]	76
Height [mm]	90
IP protection class	IP54
Voltage class	protection cl. I
Net weight [kg]	4,37
Colour lamp	white
RAL	9016
EAN-Number	9010506190021
Lifetime [h]	L80 B10 50 000
Energy efficiency cl.	D
No. of luminaires B16A	50

LIGHT DISTRIBUTION CURVE

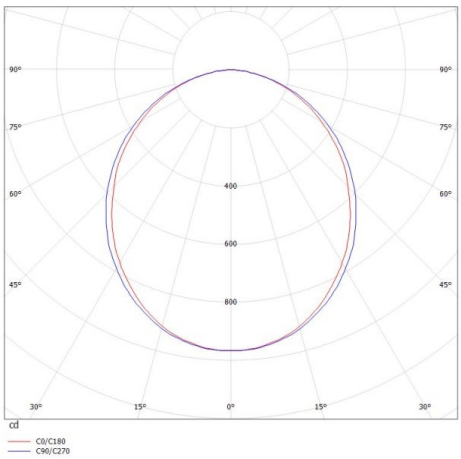

The values are rated values. Power and luminous flux are initially subject to a tolerance of +/- 10%. Colour temperature tolerance: +/- 150 K. The values apply to an ambient temperature of 25°C unless otherwise specified.