LOG OUT 2.1

728-201092114500

LOG OUT 2.1 PDI SUSPENSION made of die-cast aluminium, white, similar to RAL 9016,satined PMMA opal diffuser light output direct / indirect, with converter, dimmability: not dimmable, through wiring 3x1,5mm², cable transparent, adapter/ceiling base white, pendant length 3000mm, IP20

DRAWING

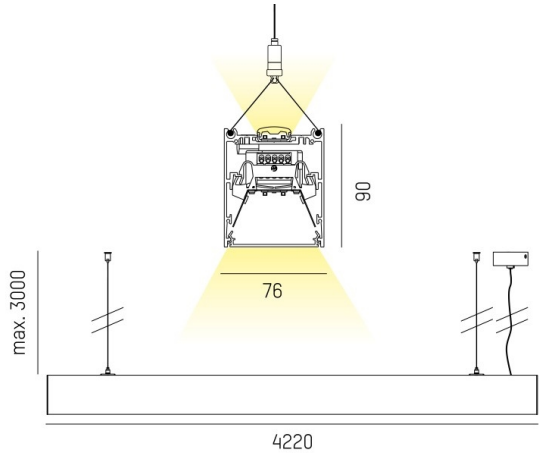

LIGHT DISTRIBUTION CURVE

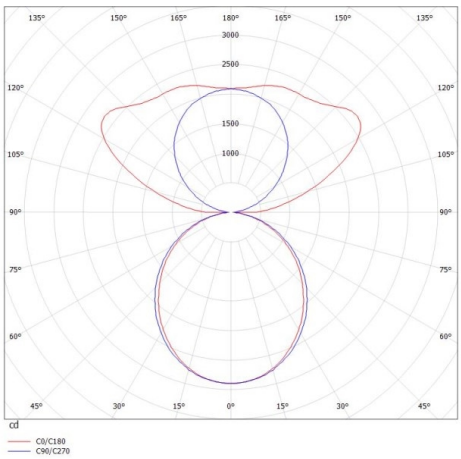

TECHNICAL DETAILS

System perform. [W]	117
Bulb type	LED
Luminous flux [lm]	16740
Colour temp. [K]	4000K
CRI	>80
Optics	PMMA opal diffuser
Designer	INHOUSE
Converter	with converter
Dimming	not dimmable
Light output	direct / indirect
Voltage [V]	220-240V 50/60Hz
Through wiring	3x1,5mm²
Material	die-cast aluminium
Length [mm]	4220
Width [mm]	76
Height [mm]	90
Pendant length [mm]	3000
IP protection class	IP20
Voltage class	protection cl. I
Net weight [kg]	14,75
Colour lamp	white
RAL	9016
Colour adapter/ceiling base	white
Electric wire	transparent
EAN-Number	9010506182187
Lifetime [h]	L80 B10 50 000
Energy efficiency cl.	D
No. of luminaires B16A	16

CE

The values are rated values. Power and luminous flux are initially subject to a tolerance of +/- 10%. Colour temperature tolerance: +/- 150 K. The values apply to an ambient temperature of 25°C unless otherwise specified.