MOLTO LUCE®

# LOG OUT 2.1

**728-207084613660**

LOG OUT 2.1 BINA LENS PDI SUSPENSION made of die-cast aluminium, black, similar to RAL 9005, decor black,lens optic with anti-glare grid beam 65°, light output direct / indirect, UGR <19, with converter, dimmability: not dimmable, through wiring 3x1,5mm², cable transparent, adapter/ceiling base black, pendant length 3000mm, IP20

## DRAWING

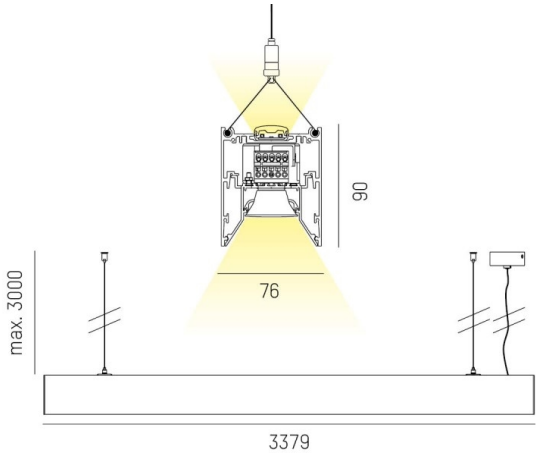


## LIGHT DISTRIBUTION CURVE

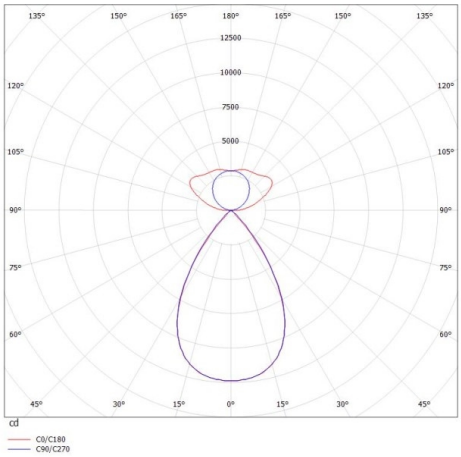


## TECHNICAL DETAILS

| | |
|---|---|
| System perform. [W] | 228 |
| Bulb type | LED |
| Luminous flux [lm] | 25590 |
| Colour temp. [K] | 2700K |
| CRI | >80 |
| UGR | <19 |
| Optics | lens optics with glare control louvre |
| Designer | INHOUSE |
| Converter | with converter |
| Dimming | not dimmable |
| Light output | direct / indirect |
| Beam angle [°] | 65° |
| Voltage [V] | 220-240V 50/60Hz |
| Through wiring | 3x1,5mm² |
| Material | die-cast aluminium |
| | |
| Length [mm] | 3378,5 |
| Width [mm] | 76 |
| Height [mm] | 90 |
| Pendant length [mm] | 3000 |
| IP protection class | IP20 |
| Voltage class | protection cl. I |
| Net weight [kg] | 14,76 |
| | |
| Colour lamp | black |
| RAL | 9005 |
| Colour adapter/ceiling base | black |
| Colour decor | black |
| Electric wire | transparent |
| EAN-Number | 9010506221800 |
| Lifetime [h] | L80 B10 50 000 |
| Energy efficiency cl. | D |
| No. of luminaires B16A | 16 |

CE

The values are rated values. Power and luminous flux are initially subject to a tolerance of +/- 10%. Colour temperature tolerance: +/- 150 K. The values apply to an ambient temperature of 25°C unless otherwise specified.