LOG IN 2.1

728-30205111356d

LOG IN 2.1 BINA R RECESSED WALL / CEILING LUMINAIRE made of die-cast aluminium, white, similar to RAL 9016, decor black,satined PMMA opal diffuser light output direct, with converter, dimmability: DALI, through wiring 3x1,5mm² + 2x0,75mm², IP20 ball-impact resistant according to DIN 18032

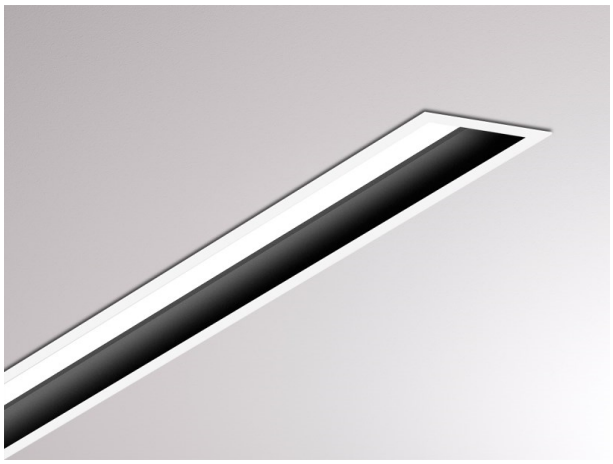

DRAWING

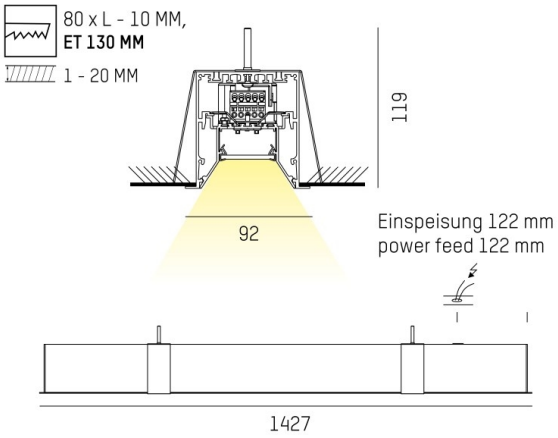

TECHNICAL DETAILS

System perform. [W]	20
Bulb type	LED
Luminous flux [lm]	1890
Colour temp. [K]	2700K
CRI	>80
Optics	PMMA opal diffuser
Designer	INHOUSE
Converter	with converter
Light output	direct
Voltage [V]	220-240V 50/60Hz
Through wiring	3x1,5mm² + 2x0,75mm²
Material	die-cast aluminium
Length [mm]	1427
Width [mm]	92
Height [mm]	119
Ceiling cutout [mm]	1417x80
Ceiling thickness [mm]	1-20
Recess depth [mm]	130
IP protection class	IP20
Voltage class	protection cl. I
Shock resistance	IK06
Net weight [kg]	5,90
Colour lamp	white
RAL	9016
Colour decor	black
EAN-Number	9010506174199
Lifetime [h]	L80 B10 50 000
Energy efficiency cl.	D
No. of luminaires B16A	50

LIGHT DISTRIBUTION CURVE

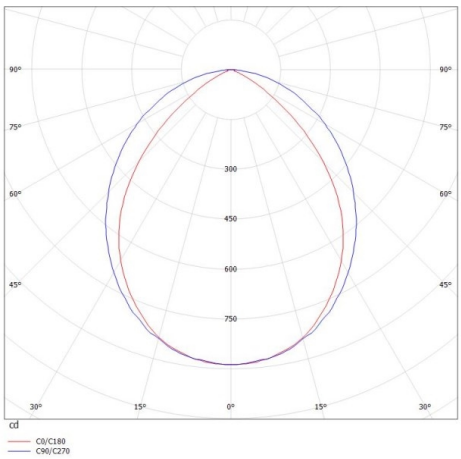

CE

The values are rated values. Power and luminous flux are initially subject to a tolerance of +/- 10%. Colour temperature tolerance: +/- 150 K. The values apply to an ambient temperature of 25°C unless otherwise specified.