MOLTO LUCE®

LOG IN 2.1 IP54

728-30403311460d

LOG IN 2.1 IP54 R RECESSED WALL / CEILING LUMINAIRE made of die-cast aluminium, black, similar to RAL 9005,satined PMMA opal diffuser light output direct, with converter, dimmability: DALI, through wiring 3x1,5mm² + 2x0,75mm², IP54

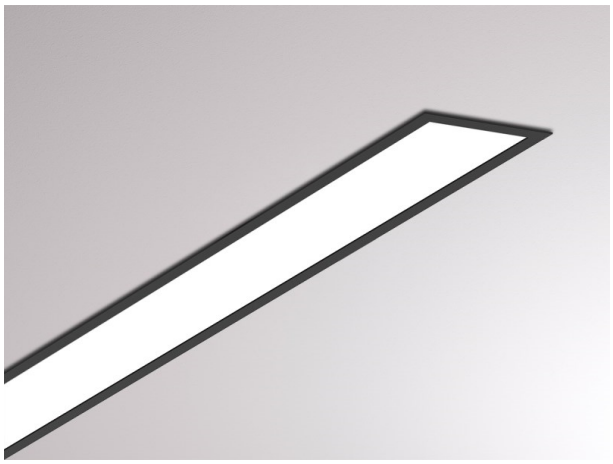

DRAWING

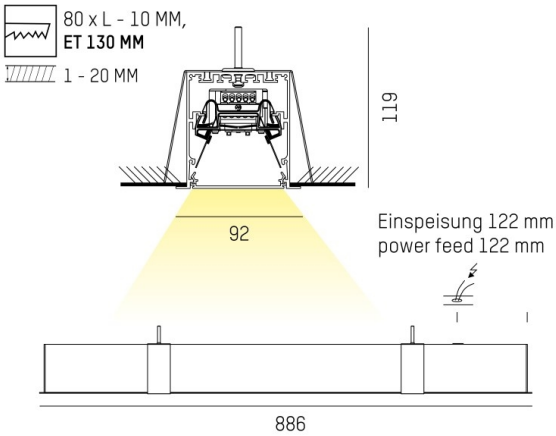

LIGHT DISTRIBUTION CURVE

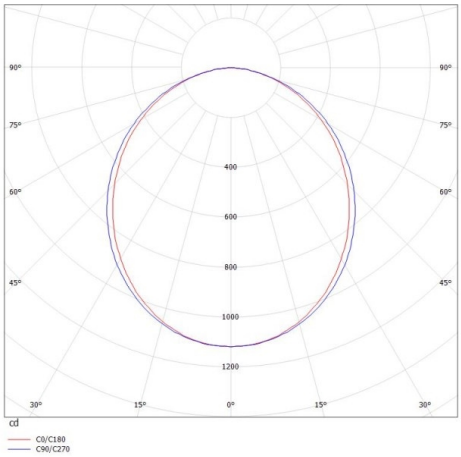

TECHNICAL DETAILS

System perform. [W]	24
Bulb type	LED
Luminous flux [lm]	2950
Colour temp. [K]	4000K
CRI	>80
Optics	PMMA opal diffuser
Designer	INHOUSE
Converter	with converter
Light output	direct
Voltage [V]	220-240V 50/60Hz
Through wiring	3x1,5mm² + 2x0,75mm²
Material	die-cast aluminium
Length [mm]	886
Width [mm]	92
Height [mm]	119
Ceiling cutout [mm]	876x80
Ceiling thickness [mm]	1-20
Recess depth [mm]	130
IP protection class	IP54
Voltage class	protection cl. I
Net weight [kg]	3,06
Colour lamp	black
RAL	9005
EAN-Number	9010506194203
Lifetime [h]	L80 B10 50 000
Energy efficiency cl.	D
No. of luminaires B16A	50

The values are rated values. Power and luminous flux are initially subject to a tolerance of +/- 10%. Colour temperature tolerance: +/- 150 K. The values apply to an ambient temperature of 25°C unless otherwise specified.