MOLTO LUCE®

LOG 2.1. SYSTEM

728-685000000600

aluminium, white powder-coated, L=1000mm

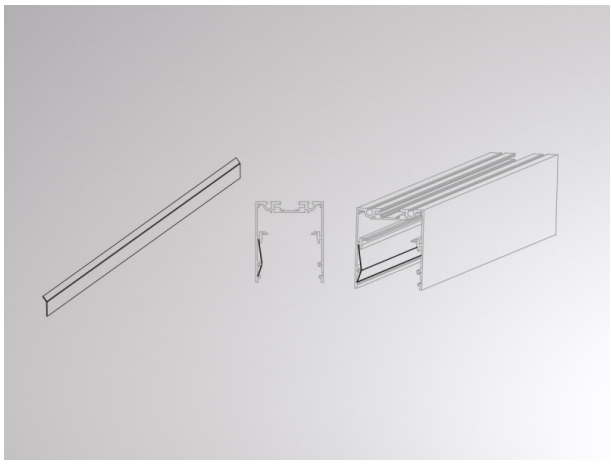

DRAWING

TECHNICAL DETAILS

Designer	INHOUSE
Dimming	not dimmable
Material	die-cast aluminium
Length [mm]	1000
IP protection class	IP20
Net weight [kg]	0,08
Colour lamp	black
RAL	9005
EAN-Number	9010506200096

LIGHT DISTRIBUTION CURVE

CE

The values are rated values. Power and luminous flux are initially subject to a tolerance of +/- 10%. Colour temperature tolerance: +/- 150 K. The values apply to an ambient temperature of 25°C unless otherwise specified.